resideo

Hydronic and Potable Water Solutions

Resideo Water Solutions are designed to be reliable and easy to install.

Resideo Hydronic Solutions

Resideo makes a wide variety of controls for hydronic systems. This concept drawing shows various components that can be used in zoned hydronic systems.

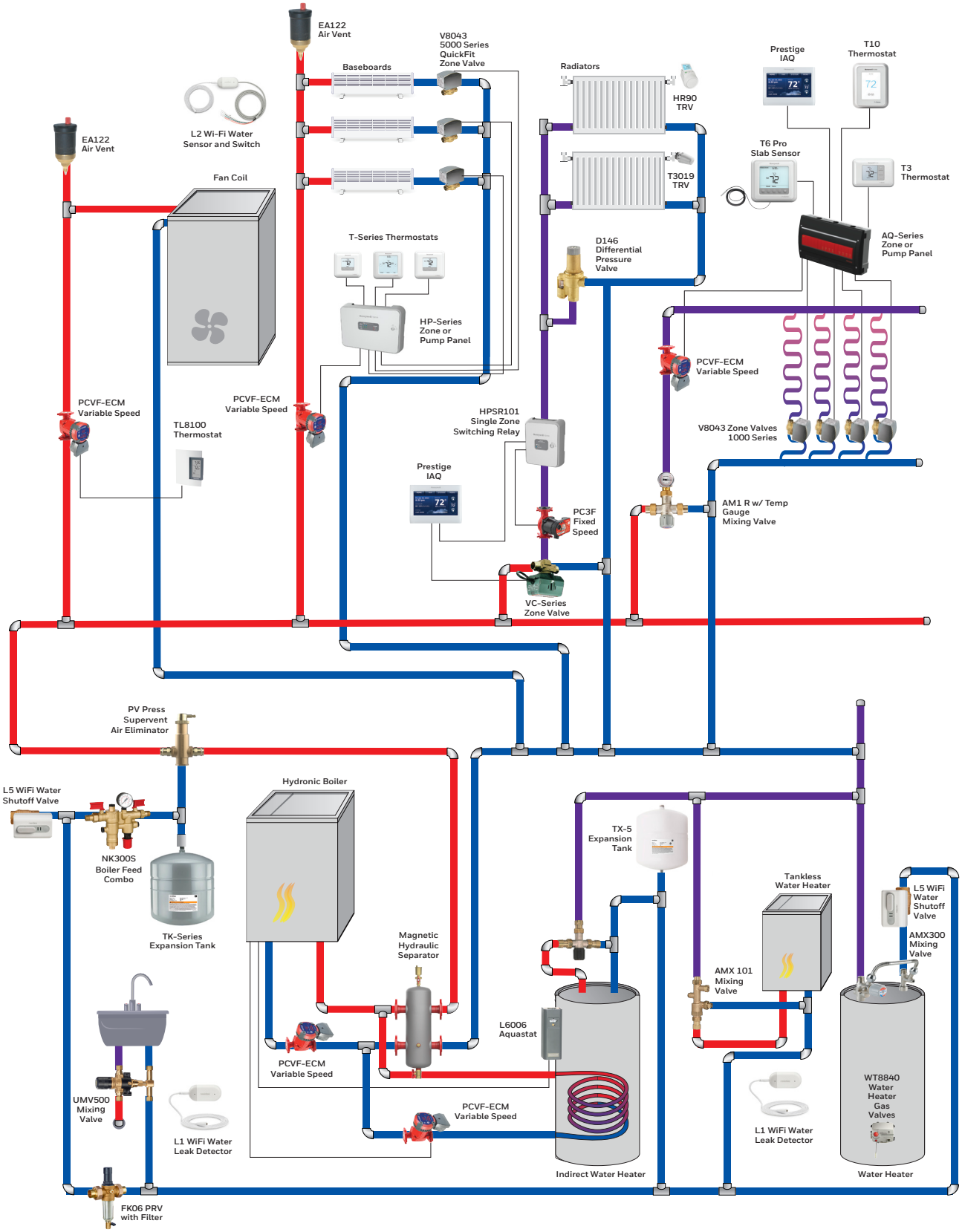

Not a typical system. Illustration for reference purposes only. Note: This is only a concept drawing. Designer must design injection and multi-zone systems from the ground up to ensure proper working of the system and compliance with code requirements. Necessary auxiliary equipment and safety devices must be used.

Table of Contents

Model Index iv
Subject Index v

Potable Water Products
Mixing Valves 1
Pressure Regulating Valve 13
Water Sediment Filters 17
Water Heater Gas Valves 18
Water Leak and Freeze Detector 20

Hydronic Water Products
T Series Thermostats 24
RedLINK® Thermostats and Accessories 25
LineVoltPRO Thermostats 31
Hydronic Zoning System 32
Hydronic Switching Relays 44
Temperature Controllers 47
Aquastat Controllers 46
Well Assemblies 60
Motorized Zone Valves 61
AquaPUMP Hydronic Circulating Pump 87
Differential Pressure Regulators 91
Air Vents and Eliminators 92
Magnetic Hydraulic Separators 99
Boiler Fill Valves 101
Backflow Preventers 102
Residential Expansion Tanks 103
Boiler Trim Kits 104
Commercial Expansion Tanks 105
Thermostatic Radiator Valves and Actuators 108

Model Index

Middle number represents installation instructions or technical manuals for that model.

A

AM-1 Series 62-3098 1
AMX Series 62-3074 4
AMX300 Series 63-9876 7
AP400 95
AQ250 .....68-0306 39
AQ255 .....69-1981 40
AQ257 .....69-1981 40

B

BP900 .....62-3088 102

C

C7089..... 69-2055EFS..... 28
C7189..... 69-2459EFS..... 29
CHW 33-00080 20

D

D146M 62-3019 91
DS05.....33-00575EF 12
DS06.....33-00014EF 13

E

EA122A 62-3038 93
EA79.....62-3034 92
ERM..... 33-00135EFS..... 27

F

F76S.....62-3015 17
FK06..... 38-00059EFS..... 14
FM911 .....33-00022 102
FV180 .....62-3086 95
FV180A 62-3086 95

H

HR90 ..... 33-00086EFS.....115
HPSR.....33-00331EF 32
HPZC.....33-00360EF 32
HYDROSEP 33-00541EF 99

L

L1 ..... 33-00381EFS..... 20
L5 ..... 33-00607EFS..... 21
L4006 .....60-2104 46
L4008 .....60-2104 48
L4081 .....60-2105 50
L6006 .....60-2104 46
L6008 .....60-2104 48
L6081 .....60-2105 50
L7224 .....69-1957 52
L8100 .....60-2336 49
L8124 .....60-2061 53
L8148 .....60-2278 55

M

MV876.....62-3061 18
MX Series.....62-3079 10

N

NK300S ..... 33-00339EFS.....101

P

PC3F1558 .....68-3083 87
PC3F2699 .....68-3084 87
PC3F4344 .....68-3085 87
PCVF 33-00563 89
PV Series 50-9337 96

R

R8182.....68-0105 59
R845.....60-2481 43
R847.....60-2481 42
R856.....60-2171 42
R8845U 68-0215 44
RA832 .....60-2481 43
RA889A 68-0216 45
RA89 .....60-2481 43
REM1000 ..... 69-2592EFS..... 29
REM5000 ..... 69-2055EFS..... 30

S

SV.....63-9479 97

T

T6 Series..... 33-00181EFS..... 24
T10 Series..... 33-00423EFS..... 22
T100 .....EN0H-2018GE25 ..... 108, 116
T104 .....62-3004 111
T3019 .....33-00586EF 115
TAXV 106
TH6100 .....33-00340 24
TH6220 .....33-00153 23
TH6320 .....33-00153 23
TH8000 Series.....69-1896 26
THM5421 .....68-0311 27
THM4000 .....68-0312 30
THM6000R..... 69-2567EFS..... 28
THX9421 .....68-0311 25
TK300 Series 62-3080 104
TL8100A 69-2018ES 31
TK Series.....33-00544 105
TX Series.....62-3082 8

U

UMV500 ..... 38-00056EFS..... 9

V

V135 ..... 95C-10711 108
V200 .....63-9379 113
V2000 Series .....63-9379 ..... 112, 118
V4043.....60-2133 ..... 67, 69
V4044.....60-2133 78
V8043.....60-2133 69–77
V8044.....60-2133 79
VC Series ..... 95C-10647..... 61–64
VF06.....33-00022 102
VU Series ..... 95C-10883EFS..... 78
VWS0.....33-00607 21

W

W8735 58

X

XPS Series 62-3080 107

A

Accessories
  Mixing Valves 3
  RedLINK Enabled Thermostats 27
  Water Filters 18
Actuators
  Thermostatic Radiator 111
Air Eliminators 96, 97
Air Purger 95
Air Vents and Eliminators 98–98
AquaPUMP Hydronic Circulating Pump 87–90
Aquastat Controllers 46–59
Automatic Air Vent for Heating System 94
Automatic Air Vent for Non-Heating System 93
Automatic Backwash Control 18

B

Backflow Preventers with Intermediate Atmospheric Vent 102
Boiler Control Panel for Hydronic Zoning 39
Boiler Fill Valves 101–102
Boiler Trim Kit with Air Purger 104
Boiler Trim Kit with SuperVent 104

C

Cartridge Cage 3-way Mixing Valves 61
Combination Protectorelay® and Hydronic Heating Controllers 59
Control Centers 42
Controllers
  Aquastat 46
  Protectorelay and Hydronic Heating 59
  TheraPro Electronic Radiator 115
Control Panels
  Hydronic Zoning 39

D

"DialSet" Boiler Fill Valves 102
"DialSet" Low Lead Pressure Regulating Valve 12
Differential Pressure Regulators 91
DirectConnect Thermostatic Mixing Valves 4
Diverting Valves 10
  Line Voltage 78
  Low Voltage 79
Domestic Hot Water Priority 58

E

Electronic Relay Boiler Control Panel for Hydronic Zoning System 39
Equipment Interface Modules
  Prestige IAQ 27
Expansion Panels
  Hydronic Zoning 40
Expansion Tanks
  Commercial 106
  Domestic Hot Water 8
  Residential 105

G

GoldTop—Universal Air Vent 95

H

Heavy Duty Relay 42
High Capacity Thermostatic Radiator Valve Actuators 111
High Capacity Thermostatic Radiator Valves 109
Hydronic Circulating Pumps, AquaPUMP 87–90
Hydronic Switching Relays 42–45

I

Industrial Air Vents 92

L

Large Flow Proportional Mixing or Diverting Valve 10
Leak and Freeze Detection 20
Linear/Modulating Cartridge Cage 2-way Zone Valve 64
LineVoltPRO® 8000 7-Day Programmable Hydronic Thermostat 31

M

Magnetic Hydraulic Separator 99
MaxiVent™ Air Vent 95
Mixing Valves 1–11
  Cartridge Cage 61
  Large Flow 10
Motorized Zone Valves 61–86
Multiple Aquastat® Controllers 50

O

Oil Electronic Aquastat Controller 52
One-pipe Steam Thermostatic Radiator Valve 118
Outdoor Reset and Domestic Hot Water Priority 58

P

Portable Comfort Control 30
Prestige 2-Wire IAQ Equipment Interface Module 27
Prestige® 2-Wire IAQ Thermostat 25
Programmable Thermostats 22–31
Pumps, Circulating
  Fixed Speed 87
  Variable Speed 89

Q

QuickFit® Zone Valves for Canada 77
QuickFit® Zone Valves, Low Voltage 76
Quick Open Cartridge Cage 2-way Zone Valve 63

R

RedLINK
  Accessories 27–30
  AquaReset 58
  Internet Gateway 28
  Portable Comfort Control 30
  Remote 29
  Sensors 28–29
  Thermostats 25
  Wireless Adapter 30
RedLINK Wireless Entry/Exit Remote 29
Relays
  Aquastat 55
  Heavy Duty 42
  Triple Aquastat 53
Relays, Hydronic Switching 42
Remote Bulb Controllers 48
Remote Temperature Controllers 47
Remote, Wireless Entry/Exit 29
Replacement Parts
  Mixing Valves 8, 11
  Pressure Regulating Valves 15
  Water Filters 18
  Zone Valves 84–86

S

Sensors
  RedLINK 28–29
Service Check Valves 105
Standard Capacity Thermostatic Radiator Actuators 116
Standard Capacity Thermostatic Radiator Valves Body 113
SuperVent® Air Eliminator 96, 97
SuperVent® Vent Top 97
Switching Relays 42–45

T

TheraPro Electronic Radiator Controller 115
Thermometers
  Sweat Connection 103
  Threaded Connection 103
Thermometers with Thermowells 103
Thermostatic Mixing or Diverting Valve Actuators 108
Thermostatic Mixing or Diverting Valves 108
Thermostatic Mixing Valves 1–8
  DirectConnect 4–8
Thermostatic Radiator Valves and Actuators 108–118
Thermostats
  LineVoltPRO 8000 31
  Prestige IAQ 25
  Programmable 25, 26
  VisionPRO 8000 26
Tridicators 103
Triple Aquastat® Relay 53

Subject Index

V

Valve Bodies Cross Reference 112
Valves
  Boiler Fill 101
  Diverting 10, 78, 79
  Fan Coil Valves 80, 81
  Mixing 1–10
  Pressure Regulating 12
  Thermostatic Mixing 108
Valves for Steam
  Low Voltage Normally Open 69
VisionPRO® 8000 with RedLINK® technology 26

W

Water Filters 17
Water Heater Gas Valves 18
Water Leak Shutoff 21
Well Assemblies 60
Wireless Adapter, RedLINK 30
Wireless Indoor Air Sensor 29
Wireless Outdoor Sensor 28

Z

Zone Valves
  Line Voltage 67
  Low Voltage Normally Closed 70, 73
  Low Voltage Normally Open 75
  Motorized 61
  Press 70
Zone Valves, Fan Coil 80, 81
Zone Valves for Canada 73, 77
Zone Valves for Steam
  Line Voltage 69
  Low Voltage Normally Open 69
Zone Valves, Motorized 61
Zoning Expansion Panel for Hydronic Zoning System 40

AM-1 Series Thermostatic Mixing Valve

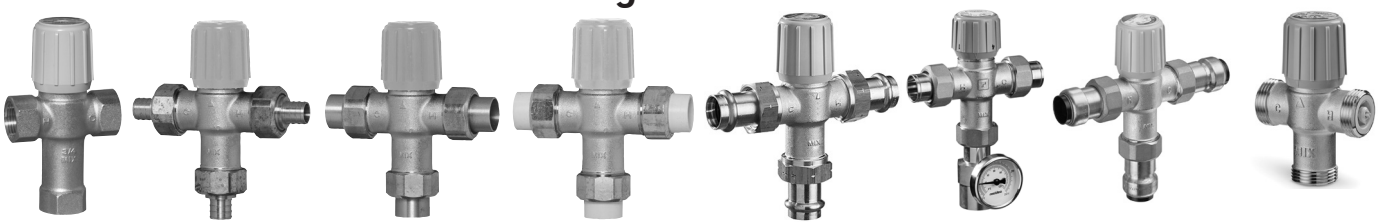

NPT | PEX | Sweat | CPVC | Press | Sweat w/ Temp Gauge | Push Connect | Body Only

AM-1 series adjusts, maintains, and limits the hot water temperature settings to provide comfort and protect equipment at home. While increasing the amount of safe, usable hot water, it efficiently offers anti-scald, anti-chill protection.

- Features dual purpose mixing or diverting values
- Offers constant water temperature under changing operating conditions
- Temperature is limited at any point and if cold water supply is interrupted, flow reduction occurs in seconds
- Provides reliable performance at minimum flow of 05 gpm and proportional valve for simultaneous control of hot and cold
- Maximum pressure 150 psi and maximum temperature of 212°F (100°C)
- Tamper-resistant design with nickel-plated brass construction and EPDM O-rings
- Designed for easy maintenance and Teflon® coating prevents mineral build-up and extends life
- Lead free products have products numbers end in LF

Applications: Domestic water; Nursing homes; Public facilities; Automatic faucets; Radiant floor heating; Space heating; Combo systems; Solar hot water; Greenhouses; Industrial applications; Photo processing

Approvals*: ASSE (see table), IAPMO, CSA, NSF/ANSI 61 & 372 Compliant
*Not including "R" or Radiant models for hydronic systems.

Pressure Drop Chart

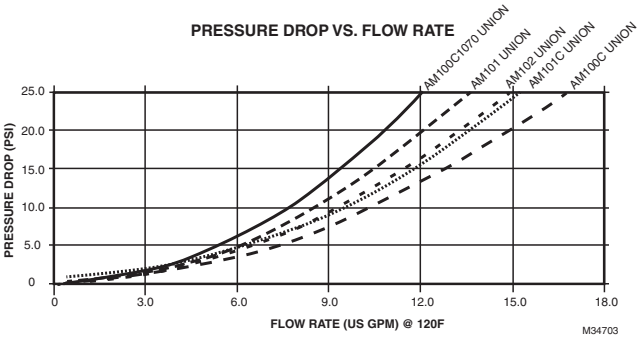

Material Number	Pipe Size in/(DN)	Connection Type	Capacity (Cv)	Operating Temperature °F (°C)	Approvals, ASSE	Comments
AM100-1LF/U	1/2 in. (DN15)	NPT	3.2 Cv	70°F to 145°F (21°C to 63°C)	1017	Low lead Content <.25% by weighted average
AM100-UP-1LF/U	1/2 in. (DN 15)	Union Press	3.9 Cv	70°F to 145°F (21°C to 63°C)	1017	Low lead Content <.25% by weighted average
AM100-UCPVC-1LF/U	1/2 in. (DN15)	Union CPVC	3.9 Cv	70°F to 145°F (21°C to 63°C)	1017	Low lead Content <.25% by weighted average
AM100-UPEX-1LF/U	1/2 in. (DN15)	Union PEX	3.9 Cv	70°F to 145°F (21°C to 63°C)	1017	Low lead Content <.25% by weighted average
AM100-US-1LF/U	1/2 in. (DN15)	Union Sweat	3.9 Cv	70°F to 145°F (21°C to 63°C)	1017	Low lead Content <.25% by weighted average
AM100-UT-1LF/U	1/2 in. (DN15)	Union NPT	3.9 Cv	70°F to 145°F (21°C to 63°C)	1017	Low lead Content <.25% by weighted average
AM100-USTG-1LF/U	1/2 in. (DN15)	Union Sweat	3.9 Cv	70°F to 145°F (21°C to 63°C)	1017	Low lead Content <.25% by weighted average
AM100-SB-1LF/U	1/2 in. (DN15)	Push Connect	3.9 Cv	70°F to 145°F (21°C to 63°C)	1017, 1061	Low lead Content <.25% by weighted average
AM100C1070UCPVC1LF	1/2 in. (DN15)	Union CPVC	1.8 Cv	70°F to 120°F (21°C to 49°C)	1070, 1017	Low lead Content <.25% by weighted average
AM100C1070-UP-1LF	1/2 in. (DN15)	Union Press	1.8 Cv	70°F to 120°F (21°C to 49°C)	1070, 1017	Low lead Content <.25% by weighted average
AM100C1070-UPEX1LF	1/2 in. (DN15)	Union PEX	1.8 Cv	70°F to 120°F (21°C to 49°C)	1070, 1017	Low lead Content <.25% by weighted average
AM100C1070-US-1LF	1/2 in. (DN15)	Union Sweat	1.8 Cv	70°F to 120°F (21°C to 49°C)	1070, 1017	Low lead Content <.25% by weighted average
AM100C1070-UT-1LF	1/2 in. (DN15)	Union NPT	1.8 Cv	70°F to 120°F (21°C to 49°C)	1070, 1017	Low lead Content <.25% by weighted average
AM100C1070-USTG-LF	1/2 in. (DN15)	Union Sweat	1.8 Cv	70°F to 120°F (21°C to 49°C)	1070, 1017	Low lead Content <.25% by weighted average
AM100C1070-SB-1LF	1/2 in. (DN15)	Push Connect	1.8 Cv	70°F to 120°F (21°C to 49°C)	1070, 1017, 1061	Low lead Content <.25% by weighted average
AM100C-1LF/U	1/2 in. (DN15)	NPT	3.2 Cv	70°F to 120°F (21°C to 49°C)	1017	Low lead Content <.25% by weighted average
AM100R-UP-1/U	1/2 in. (DN15)	Union Press	3.9 Cv	70°F to 180°F (21°C to 82°C)	No Approval	Heating Only
AM100R-US-1/U	1/2 in. (DN15)	Union Sweat	3.9 Cv	70°F to 180°F (21°C to 82°C)	No Approval	Heating Only
AM100R-UT-1/U	1/2 in. (DN15)	Union NPT	3.9 Cv	70°F to 180°F (21°C to 82°C)	No Approval	Heating Only
AM100R-USTG-1/U	1/2 in. (DN15)	Union Sweat	3.9 Cv	70°F to 180°F (21°C to 82°C)	No Approval	Heating Only
AM101-1LF/U	3/4 in. (DN20)	NPT	3.8 Cv	70°F to 145°F (21°C to 63°C)	1017	Low lead Content <.25% by weighted average
AM101-UCPVC-1LF/U	3/4 in. (DN20)	Union CPVC	3.9 Cv	70°F to 145°F (21°C to 63°C)	1017	Low lead Content <.25% by weighted average
AM101-UP-1LF/U	3/4 in. (DN20)	Union Press	3.9 Cv	70°F to 145°F (21°C to 63°C)	1017	Low lead Content <.25% by weighted average
AM101-UPEX-1LF/U	3/4 in. (DN20)	Union PEX	3.9 Cv	70°F to 145°F (21°C to 63°C)	1017	Low lead Content <.25% by weighted average
AM101-US-1LF/U	3/4 in. (DN20)	Union Sweat	3.9 Cv	70°F to 145°F (21°C to 63°C)	1017	Low lead Content <.25% by weighted average
AM101-UT-1LF/U	3/4 in. (DN20)	Union NPT	3.9 Cv	70°F to 145°F (21°C to 63°C)	1017	Low lead Content <.25% by weighted average

Mixing Valves

Material Number	Pipe Size in/(DN)	Connection Type	Capacity (Cv)	Operating Temperature °F (°C)	Approvals, ASSE	Comments
AM101-USTG-1LF/U	3/4 in. (DN20)	Union Sweat	3.9 Cv	70°F to 145°F (21°C to 63°C)	1017	Low lead Content <.25% by weighted average
AM101-SB-1LF/U	3/4 in. (DN20)	Push Connect	3.9 Cv	70°F to 145°F (21°C to 63°C)	1017, 1061	Low lead Content <.25% by weighted average
AM101C1070-SB-1LF	3/4 in. (DN20)	Push Connect	1.8 Cv	70°F to 120°F (21°C to 49°C)	1070, 1017, 1061	Low lead Content <.25% by weighted average
AM101C1070UCPVC1LF	3/4 in. (DN20)	Union CPVC	1.8 Cv	70°F to 120°F (21°C to 49°C)	1070, 1017	Low lead Content <.25% by weighted average
AM101C1070-UP-1LF	3/4 in. (DN20)	Union Press	1.8 Cv	70°F to 120°F (21°C to 49°C)	1070, 1017	Low lead Content <.25% by weighted average
AM101C1070-UPEX1LF	3/4 in. (DN20)	Union PEX	1.8 Cv	70°F to 120°F (21°C to 49°C)	1070, 1017	Low lead Content <.25% by weighted average
AM101C1070-US-1LF	3/4 in. (DN20)	Union Sweat	1.8 Cv	70°F to 120°F (21°C to 49°C)	1070, 1017	Low lead Content <.25% by weighted average
AM101C1070-UT-1LF	3/4 in. (DN20)	Union NPT	1.8 Cv	70°F to 120°F (21°C to 49°C)	1070, 1017	Low lead Content <.25% by weighted average
AM101C1070-USTG-LF	3/4 in. (DN20)	Union Sweat	1.8 Cv	70°F to 120°F (21°C to 49°C)	1070, 1017	Low lead Content <.25% by weighted average
AM102C1070-UT-1LF	1 in. (DN25)	Union NPT	1.8 Cv	70°F to 120°F (21°C to 49°C)	1070, 1017	Low lead Content <.25% by weighted average
AM101C-1LF/U	3/4 in. (DN20)	NPT	3.8 Cv	70°F to 120°F (21°C to 49°C)	1017	Low lead Content <.25% by weighted average
AM101R-UP-1/U	3/4 in. (DN20)	Union Press	3.9 Cv	70°F to 180°F (21°C to 82°C)	No Approval	Heating Only
AM101R-UPEX-1/U	3/4 in. (DN20)	Union PEX	3.9 Cv	70°F to 180°F (21°C to 82°C)	No Approval	Heating Only
AM101R-US-1/U	3/4 in. (DN20)	Union Sweat	3.9 Cv	70°F to 180°F (21°C to 82°C)	No Approval	Heating Only
AM101R-UT-1/U	3/4 in. (DN20)	Union NPT	3.9 Cv	70°F to 180°F (21°C to 82°C)	No Approval	Heating Only
AM101R-USTG-1/U	3/4 in. (DN20)	Union Sweat	3.9 Cv	70°F to 180°F (21°C to 82°C)	No Approval	Heating Only
AM102-1LF/U	1 in. (DN25)	NPT	4.3 Cv	70°F to 145°F (21°C to 63°C)	1017	Low lead Content <.25% by weighted average
AM102-UP-1LF/U	1 in. (DN25)	Union Press	3.9 Cv	70°F to 145°F (21°C to 63°C)	1017	Low lead Content <.25% by weighted average
AM102-US-1LF/U	1 in. (DN25)	Union Sweat	3.9 Cv	70°F to 145°F (21°C to 63°C)	1017	Low lead Content <.25% by weighted average
AM102-UT-1LF/U	1 in. (DN25)	Union NPT	3.9 Cv	70°F to 145°F (21°C to 63°C)	1017	Low lead Content <.25% by weighted average
AM102-USTG-1LF/U	1 in. (DN25)	Union Sweat	3.9 Cv	70°F to 145°F (21°C to 63°C)	1017	Low lead Content <.25% by weighted average
AM102-SB-1LF/U	1 in. (DN25)	Push Connect	3.9 Cv	70°F to 145°F (21°C to 63°C)	1017, 1061	Low lead Content <.25% by weighted average
AM102C1070-US-1LF	1 in. (DN25)	Union Sweat	1.8 Cv	70°F to 120°F (21°C to 49°C)	1070, 1017	Low lead Content <.25% by weighted average
AM102C-1LF/U	1 in. (DN25)	NPT	4.3 Cv	70°F to 120°F (21°C to 49°C)	1017	Low lead Content <.25% by weighted average
AM102C1070-SB-1LF	1 in. (DN25)	Push Connect	1.8 Cv	70°F to 120°F (21°C to 49°C)	1017, 1070, 1061	Low lead Content <.25% by weighted average
AM102C1070-USTG-LF	1 in. (DN25)	Union Sweat	1.8 Cv	70°F to 120°F (21°C to 49°C)	1070, 1017	Low lead Content <.25% by weighted average
AM102C1070-UP-1LF	1 in. (DN25)	Union ProPress	1.8 Cv	70°F to 120°F (21°C to 49°C)	1070, 1017	Low lead Content <.25% by weighted average
AM102R-US-1/U	1 in. (DN25)	Union Sweat	3.9 Cv	70°F to 180°F (21°C to 82°C)	No Approval	Heating Only
AM102R-UT-1/U	1 in. (DN25)	Union NPT	3.9 Cv	70°F to 180°F (21°C to 82°C)	No Approval	Heating Only
AM102R-USTG-1/U	1 in. (DN25)	Union Sweat	3.9 Cv	70°F to 180°F (21°C to 82°C)	No Approval	Heating Only
AM102R-UP-1/U	1 in. (DN25)	Union ProPress	3.9 Cv	70°F to 180°F (21°C to 82°C)	No Approval	Heating Only

Mixing Valve Accessories

Part No.	Description	
AM1-BODY-1LF/U	AM1 BODY ONLY STANDARD 70F-145F	
AM1-RBODY-1/U	AM1 BODY ONLY RADIANT 70F-180F	
AM1-1070BODY-1LF/U	AM1 BODY ONLY C1070 70F-120F	
AM08-038LF/U	(3) 1/2" Lead-free Sweat Tailpieces, Nuts, Gaskets	
AM08-039LF/U	(3) 3/4" Lead-free Sweat Tailpieces, Nuts, Gaskets	
AM08-040LF/U	(3) 1" Lead-free Sweat Tailpieces, Nuts, Gaskets	
AM08-041LF/U	(3) 1/2" Lead-free NPT Tailpieces, Nuts, Gaskets	
AM08-042LF/U	(3) 3/4" Lead-free NPT Tailpieces, Nuts, Gaskets	
AM08-043LF/U	(3) 1" Lead-free NPT Tailpieces, Nuts, Gaskets	
AM100-SB/U	(3) 1/2" Lead-free Push Connect x Male NPT Fittings	
AM101-SB/U	(3) 3/4" Lead-free Push Connect x Male NPT Fittings	
AM102-SB/U	(3) 1" Lead-free Push Connect x Male NPT Fittings	
AM206-039/U	(3) 1/2" Lead-free CPVC Tailpieces, Nuts, Gaskets	
AM206-040/U	(3) 3/4" Lead-free CPVC Tailpieces, Nuts, Gaskets	
AM206-041LF/U	(3) 1/2" Lead-free PEX Tailpieces, Nuts, Gaskets	
AM206-042LF/U	(3) 3/4" Lead-free PEX Tailpieces, Nuts, Gaskets	
TS205-064/U	Thermal Temperature Indicator Strip <140F	
TS206-080/U	Thermal Temperature Indicator Strip <180F	
AM1-TAIL100-3UP-LF	(3) 1/2" Lead-free ProPress Tailpieces, Nuts, Gaskets	
AM1-TAIL101-3UP-LF	(3) 3/4" Lead-free ProPress Tailpieces, Nuts, Gaskets	
AM1-TAIL102-3UP-LF	(3) 1" Lead-free ProPress Tailpieces, Nuts, Gaskets	
AM1-TG100-US-LF/U	(1) 1/2" Lead-free AM1 Temp Gauge Tail PC w/Sweat	
AM1-TG101-US-LF/U	(1) 3/4" Lead-free AM1 Temp Gauge Tail PC w/Sweat	
AM1-TG102-US-LF/U	(1) 1" Lead-free AM1 Temp Gauge Tail PC w/Sweat	
TG200-UT/U	Thermometer, 2" Dial w/Threaded Well	
TG250-UT/U	Thermometer, 2.5" Dial w/Threaded Well	
AM-1-020RP/U	REPLACEMENT ASSEMBLY 'B' and 'C' MODEL	
AM-1-025RP/U	REPLACEMENT ASSEMBLY STD and 'R' MODEL	
AM-1-030RP/U	REPLACEMENT ASSEMBLY C1070 MODEL	
AMCU-001RP/U	Accessory kit: (1) check valve for AMX and legacy AM1 valves, (1) check valve for new AM1 valve kit	
AMU200-RP/U	(3) Gasket Kit	

Braukmann AM-1 Build Your Own Mixing Valves

- Accurately adjusts, maintains, and limits the hot water temperature to a desired setting selected by the user.
- Teflon coating increases product life and reduces callbacks.
- Each valve body can be made into multiple configurations by size and connection type.
- Valve Size includes: 1/2", 3/4", and 1".
- Fitting options available: NPT, Sweat, Press, PEX, CPVC, and Push Connect.
- Available in ASSE 1017, ASSE 1070 and radiant models.
- Each tailpiece SKU includes 3 tailpieces, 3 gaskets, and 3 union nuts.
- Thermostrips, thermometer gauges, check valves, and thermal elements are available separately.

Model	Operating Temp.	ASSE Certs.
AM1-1070BODY-1LF/U	70°F-120°F	1017 & 1070
AM1-BODY-1LF/U	70°F-145°F	1017
AM1-RBODY-1/U	70°F-180°F	N/A

Connection	1/2"	3/4"	1"
Union CPVC	AM206-039/U	AM206-040/U	N/A
Union Sweat	AM08-038LF/U	AM08-039LF/U	AM08-040LF/U
Union PEX	AM206-041LF/U	AM206-042LF/U	N/A
Union NPT	AM08-041LF/U	AM08-042LF/U	AM08-043LF/U
Union Press	AM1-TAIL100-3UP-LF	AM1-TAIL101-3UP-LF	AM1-TAIL102-3UP-LF
Union w/Temperature Gauge	AM1-TG100-US-LF/U	AM1-TG101-US-LF/U	AM1-TG102-US-LF/U
Union Push Connect	AM100-SB/U	AM101-SB/U	AM102-SB/U

AMX Series DirectConnect Thermostatic Mixing Valves

Sweat, NPT & Press

AMX series DirectConnect reduces water heater installation time as the cold and hot port position eliminates the need for typical elbows and tees. Designed for safety to prevent scalding, it also increases user comfort.

- Designed to be directly installed on water heater hot outlet port
- Offers constant water temperature under changing operating conditions
- Temperature is adjustable using 3/16 allen wrench and if cold water supply is interrupted, flow reduction occurs in seconds
- Features brass/stainless construction and Teflon coated wear surfaces
- Heat trapping not required and recirculation portion option allows for fast response
- Lead free products have product numbers end in LF
- US Patent No. US7744007

Applications: Heat Pump Systems; Domestic water; Nursing homes; Public facilities; Automatic faucets; Radiant floor heating; Space heating; Combo systems; Solar hot water; Greenhouses; Industrial applications; Photo processing

Approvals: ASSE 1017, IAPMO, CSA, NSF/ANSI 61 & 372 Compliant

Pressure Drop Chart

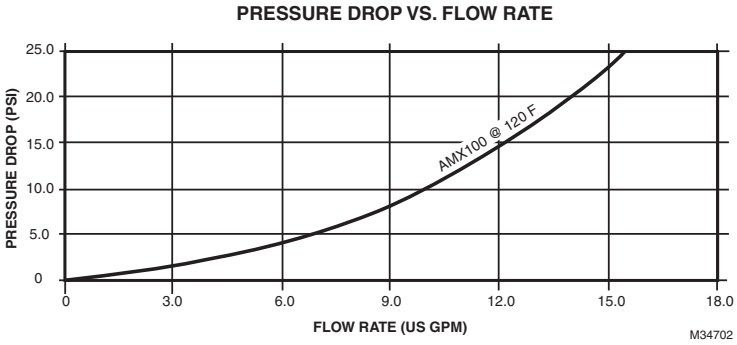

Dimensions in inches

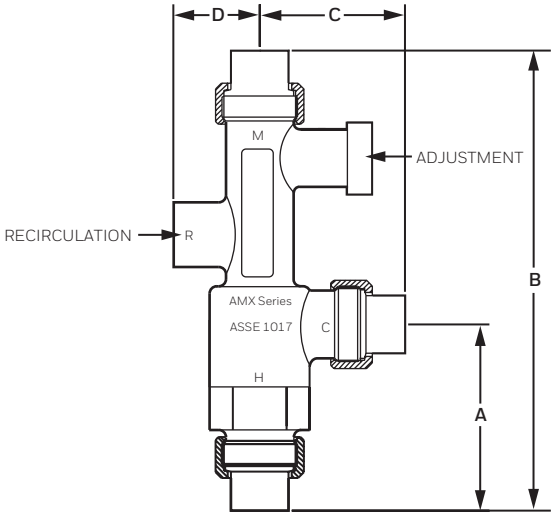

PRODUCT NUMBER	DIMENSIONS (INCHES)			
	A	B	C	D
AMX101-US-1LF	4-3/16	9	2-1/2	1-1/2
AMX101-UT-1LF	4-3/16	9-11/16	3-1/2	1-1/2
AMX101-UP-1LF	4-3/16	8-3/4	3-1/4	1-1/2
AMX102-US-1LF	4-1/2	10	3-1/2	1-1/2
AMX102-UT-1LF	4-1/2	10-5/16	3-13/16	1-1/2
AMX102-UP-1LF	4-1/2	10-3/16	3-11/16	1-1/2

M27478C

Mixing Valves

Thermostatic Replacement Mixing Valve Installation

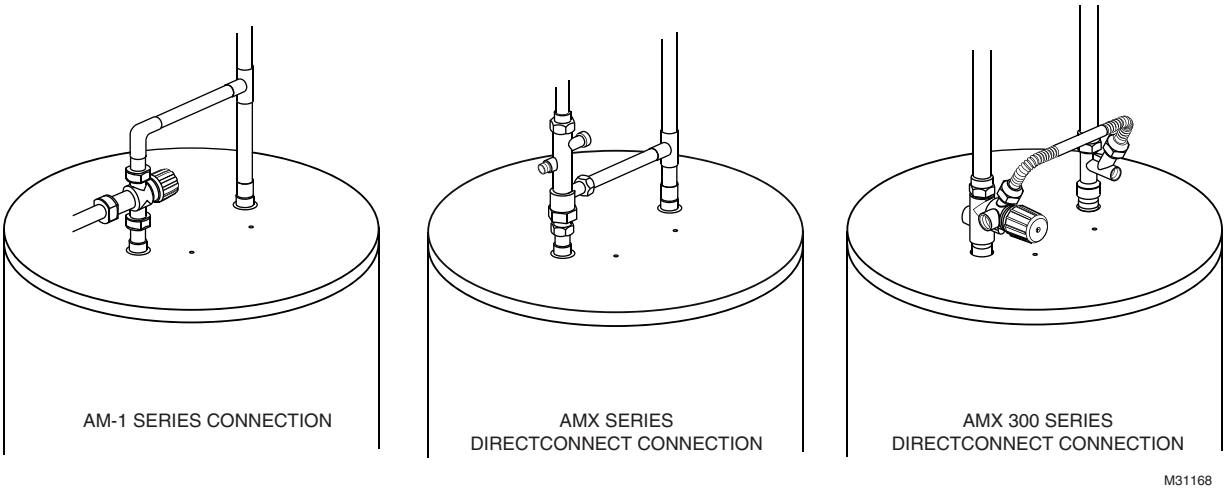

Material Number	Pipe Size in/(DN)	Connection Type	Capacity (Cv)	Operating Temperature °F (°C)	Comments	Includes
AMX101-US-1LF/U	3/4 in. (DN20)	Union NPT, 3/4 in. Bottom	4 Cv	90°F to 130°F (32°C to 54°C)	Low lead Content <.25% by weighted average	One 3/4" Union NPT Inlet, Two 3/4" Union Sweat fittings
AMX101-UT-1LF/U	3/4 in. (DN20)	Union NPT, 3/4 in. Bottom	4 Cv	90°F to 130°F (32°C to 54°C)	Low lead Content <.25% by weighted average	Three 3/4" Union NPT fittings
AMX101-UP-1LF/U	3/4 in. (DN20)	Union NPT, 3/4 in. Bottom	4 Cv	90°F to 130°F (32°C to 54°C)	Low lead Content <.25% by weighted average	One 3/4" Union NPT Inlet, Two 3/4" Union Press fittings
AMX102-US-1LF/U	1 in. (DN25)	Union NPT, 1 in. Bottom	4 Cv	90°F to 130°F (32°C to 54°C)	Low lead Content <.25% by weighted average	One 1" Union NPT Inlet, Two 1" Union Sweat fittings
AMX102-UT-1LF/U	1 in. (DN25)	Union NPT, 1 in. Bottom	4 Cv	90°F to 130°F (32°C to 54°C)	Low lead Content <.25% by weighted average	Three 1" Union NPT fittings
AMX102-UP-1LF/U	1 in. (DN25)	Union NPT, 1 in. Bottom	4 Cv	90°F to 130°F (32°C to 54°C)	Low lead Content <.25% by weighted average	One 1" Union NPT Inlet, Two 1" Union Press fittings

AMX300 Series DirectConnect Thermostatic Mixing Valve and Kits

AMX300 series DirectConnect kits reduce installation time while providing industry-leading mixing valve technology, which offers excellent temperature stability and control and minimizes scalding risk to building occupants.

- Temperature is adjustable using push-twist-release locking hand wheel design and if cold water supply is interrupted, flow reduction occurs in seconds
- Kit includes mixing valve, cold water tee fitting and flexible stainless steel connector
- Recirculation portion option offers fast delivery of heated water to the furthest fixtures, increasing user comfort with more available hot water
- The alternate hot port bypasses hot water directly from the tank to non-mixed temperature applications
- Fits most water heaters up to 1 in., with all necessary adapters included
- Brass/stainless construction with Teflon coated wear surfaces for extended surface
- Lead free products have products numbers end in LF

Applications: Domestic Hot Water
Fluid Temperature: Mixed Water Supply — 100°F to 145°F (Mixed Water Supply — 38°C to 63°C)
Minimum Flow Rate: 0.95 lpm; Recirculation Port: 1/2 in. NPT; Alternate Hot Port: 1/2 in. NPT (0.25 gpm; Recirculation Port: 1/2 in. NPT; Alternate Hot Port: 1/2 in. NPT)

Maximum Safe Operating Pressure (psi): 150 psi
Approvals: ASSE 1017, IAPMO, CSA, NSF/ANSI 61 & 372 Compliant

Pressure Drop Chart

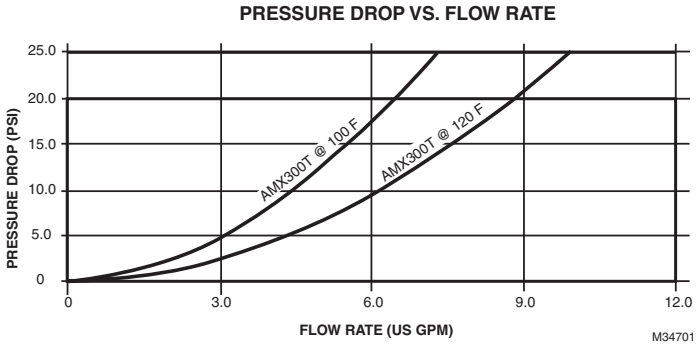

Material Number	Pipe Size in/(DN)	Connection Type	Capacity (Cv)	Operating Temperature °F (°C)	Description	Comments
AMX300TLF/U	3/4 in. (DN20)	Hot Inlet - Female NPT; Mixed Outlet - Male NPT	2.3 Cv	33°F to 80°F (cold water inlet); 100°F to 212°F (hot water inlet) (0.5°C to 27°C (cold water inlet); 38°C to 100 C) (hot water inlet))	DirectConnect water heater kit with 3/4 in. ASSE 1017 mixing valve, 3/4 in. cold water tee, and 8-in. SS flex connector	Low lead Content <.25% by weighted average
AMX302TLF/U	3/4 in. (DN20)	Hot Inlet - Female NPT; Mixed Outlet - Male NPT	2.3 Cv	33°F to 80°F (cold water inlet); 100°F to 212°F (hot water inlet) (0.5°C to 27°C (cold water inlet); 38°C to 100°C) (hot water inlet))	DirectConnect water heater kit with 3/4-in. ASSE 1017 mixing valve, 3/4-in. cold water tee, and 11-in. SS flex connector	Low lead Content <.25% by weighted average

AMX Series DirectConnect Replacement Part

Material Number	Capacity (Cv)	Operating Temperature °F (°C)	Description	
AMX-001RP/U		90°F to 130°F (32°C to 54°C)	AMX element, spring, plug assembly. For AMX100 series valves.	
AM-1-025RP/U		90°F to 130°F (32°C to 54°C)	Thermal element, spring, and plug assembly; Rebuild kit for AM-1 "Standard" (70 -145°F; 21-49°C) series and AMX300 series valves	
AMX300LF/U	2.1 Cv	33°F to 80°F (cold water inlet); 100°F to 212°F (hot water inlet) (0.5°C to 27°C (cold water inlet); 38°C to 100°C) (hot water inlet))	3/4 in. mixing valve (Replacement valve tor AMX300T and AMX302T DirectConnect mixing valve kits.)	

TX Series Expansion Tanks—Domestic Hot Water

The Thermal Expansion Absorber is an expansion tank with a butyl diaphragm. The Thermal Expansion Tank controls pressure build-up in the system, eliminates relief valve spillage, protects fixtures and extends water heater life.

- Heavy duty butyl rubber diaphragm (FDA approved) isolates water from air.
- Polypropylene liner, 100% non-metallic, non-corrosive water reservoir.
- Prevents water hammer.
- Maintenance free.
- Protects water heater from harmful pressure cycling.
- Allows storage of expanded water with no increase in system pressures.
- Prevents backflow when supply pressure falls below system pressure.
- 7 year warranty for TX-5 and TX-12 units with date code 1901 or newer.

Maximum Safe Operating Pressure (psi): 150 psi
Maximum Safe Operating Pressure (kPa): 1034 kPa
Precharge (psi): 40 psi

Operating Temperature Range: 200°F Maximum (93°C Maximum)
Comments: Potable

Material Number	Connection Size (in.)	Connection Type	Diameter	Height	Volume	Weight	Maximum Acceptance Volume	Materials
TX-5/U	3/4 in.	Male NPT	8 in. (203.2 mm)	13 in. (330.2 mm)	2.0 gal (7.6 L)	5 lb (2.27 kg)	0.9 gal (3.41 L)	Steel shell; Brass connection; Polypylene liner; Butyl diaphragm
TX-12/U	3/4 in.	Male NPT	11 in. (279 mm)	15 in. (381 mm)	4.4 gal (16.7 L)	9 lb (4.08 kg)	3.2 gal (12.1 L)	Steel shell; Butyl diaphragm; Polypylene liner; Brass connection
TX-25V/U	3/4 in.	Female NPT	15 in. (381 mm)	19 in. (482.6 mm)	10.3 gal (39 L)	23 lb (10.43 kg)	10.3 gal (39 L)	Steel shell; Butyl diaphragm; Brass connection; Polypylene liner

UMV500-LF/U Series UnderSink Thermostatic Mixing Valve

The UMV500-LF/U Series UnderSink Thermostatic Mixing Valve is intended for use in under counter and under sink applications. The UMV500-LF/U Universal Model is designed to be used as a three port design (touchless sink) or a four port design (two handle sink) with the addition of the 4 port adaptor (supplied with UMV500-LF/U). The UMV500-LF/U is used to prevent accidental scalding. The outlet water temperature must be properly adjusted by the installer using a thermometer to measure the outlet temperature at the faucet. A maximum outlet temperature of 110° F (43° C) is recommended.

- Universal design allows flexibility in adapting to three port or four port applications.
- Shipped with four port adapter.
- Shipped with mounting bracket for easy mounting.
- Integral check valves in hot and cold inlets.
- Lockable hand wheel for tamper resistant temperature setting.
- Lead Free (0.25% max. weighted average lead content)

Model: UMV500-LF UnderSink Mixing Valve.
Construction Materials: Forged lead-free brass body and EPDM seals. Stainless steel spring.
Working Pressure: Minimum: 20 psi (138 kPa). Maximum: 125 psi (861 kPa). Pressure difference between Hot and Cold inlets shall be less than 20%.
Connections: 3/8 in. (9.5 mm) compression-type fittings on end connections.
Valves: Integral check valves in both Hot and Cold ports.
Flow: Maximum flow 4.3 Gpm (16.5 l/min) (Cv= 0.36) Minimum flow: 0.25 Gpm (1.0 l/min)

Cold inlet temperature: 39°F - 80°F (4°C - 27°C)
Hot inlet temperature: 120°F - 180°F (49°C - 82°C)
Valve inlet temperature operating parameters: The hot inlet temperature must be at least 50°F higher than the mixed outlet temperature. The cold inlet temperature must be at least 50°F lower than the mixed outlet temperature.
Mixed Outlet Temperature: 80–120° F (27–49° C).
Approvals: ASSE 1070 Listed, CSA Certified/Listed, IAPMO/UPC Listed, NSF/ANSI61/372 Compliant
Shipping Weight LB (KG): 1.2 (0.55)

Matieral Number	Pipe Size in/(DN)	Connection Type	Capacity (CV)	Comments
UMV500-LF/U	3/8" (DN10)	Compression	0.25	3 or 4 port connection

MX Series Large Flow Proportional Mixing or Diverting Valve

Threaded

Flanged

The MX Series is a state-of-the-art mixing valve that manages the hot and cold supply based on control settings. Accurate control of temperature provides energy savings, increased comfort and safety. The Teflon wear surfaces prevent calcium buildup.

- Dual purpose mixing or diverting valve.
- Constant water temperature under different operating conditions.
- Proportional valve (control of hot and cold water).
- Flow reduction in seconds if cold water supply is interrupted.
- Maintains temperature with extremely low minimum flows.
- Temperature adjustable, tamper evident.
- Install in any position, heat trapping not required.
- Recirculation connection for fast response.
- Bronze/stainless construction.
- Wear surfaces Teflon coated to prevent deposit build-up.
- Union/tailpiece connections included.
- Tapped flange connections 2-1/2 in. and 3 in.
- Allen wrench for temperature adjustment included.
- ASSE 1017 and CSA listed (Union Models)

Applications: Any application requiring accurate control of hot water temperature based on the mixing of hot and cold water, such as: domestic water for homes, apartment, hotels, schools, nursing homes, offices, public facilities, space heating, radiant floor heating,

Dimensions in inches (millimeters)

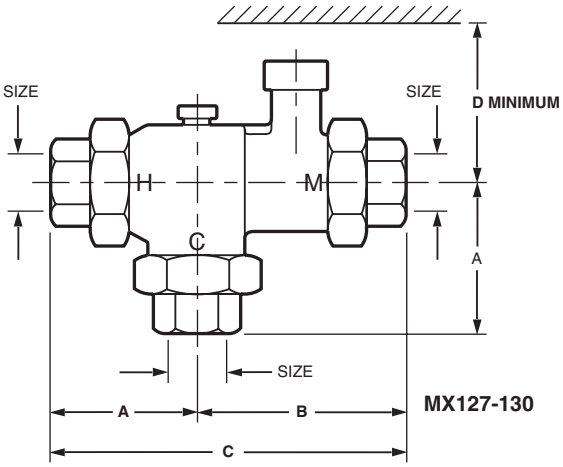

Product Number	Size NPT	Recir Port Size	Dimensions in inches (millimeters)			
			A	B	C	D
MX127LF	1”	1/2 (13)	2-51/64 (71)	3-45/64 (94)	6-1/2 (165)	6 (152)
MX128LF	1-1/4”	1/2 (13)	3-19/64 (84)	4-13/32 (112)	7-45/64 (196)	6-29/32 (175)
MX129LF	1-1/2”	1/2 (13)	3-19/32 (91)	5 (127)	8-19/32 (218)	7 (178)
MX130LF	2”	1/2 (13)	4-13/64 (107)	5-51/64 (147)	10 (254)	7-19/64 (211)

M23243E

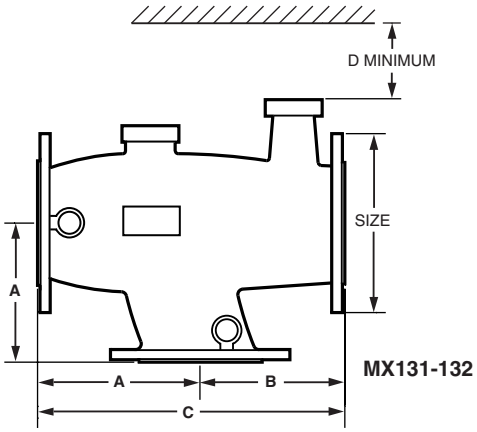

Product Number	Size NPT	Recir Port Size	Dimensions Inches (mm)			
			A	B	C	D
MX131LF	2-1/2” Flange	1 (25)	5-45/64 (145)	5-45/64 (145)	11-13/32 (290)	4 (102)
MX132LF	3” Flange	1-1/4 (32)	6-7/64 (155)	6-7/64 (155)	12-13/64 (310)	4 (102)

M27479A

Pressure Drop Chart

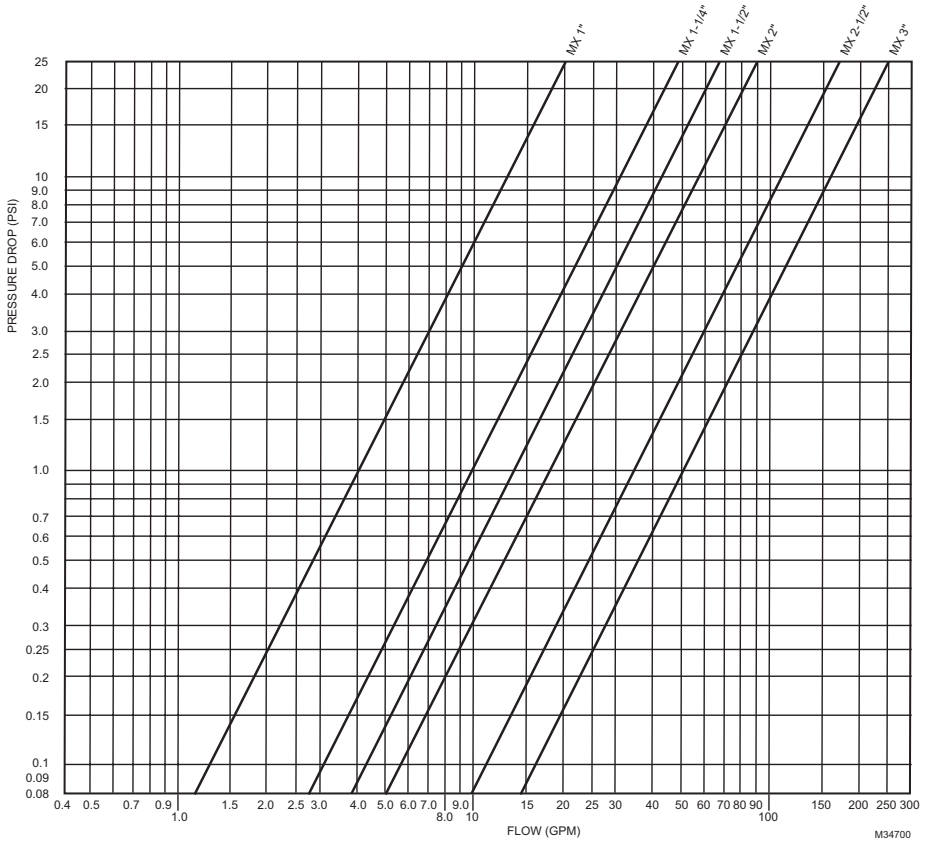

Material Number	Pipe Size in/(DN)	Connection Type	Capacity (Cv)	Operating Temperature °F (°C)	Description	Approvals, ASSE	Comments
MX127LF/U	1 in. (DN25)	NPT	4 Cv	113°F to 149°F (45°C to 65°C)	1 inch NPT MX Mixing Valves Lead Free	1017	Low Lead Content <.25% by weighted average
MX128LF/U	1 1/4 in. (DN32)	NPT	9.3 Cv	113°F to 149°F (45°C to 65°C)	1 1/4 inch NPT MX Mixing Valves Lead Free	1017	Low Lead Content <.25% by weighted average
MX129LF/U	1 1/2 in. (DN40)	NPT	13.5 Cv	113°F to 149°F (45°C to 65°C)	1 1/2 inch NPT MX Mixing Valves Lead Free	1017	Low Lead Content <.25% by weighted average
MX130LF/U	2 in. (DN50)	NPT	18 Cv	113°F to 149°F (45°C to 65°C)	2 inch NPT MX Mixing Valves Lead Free	1017	Low Lead Content <.25% by weighted average
MX131LF/U	2 1/2 in. (DN65)	Flanged	34 Cv	113°F to 149°F (45°C to 65°C)	2 1/2 inch Flanged MX Mixing Valves Lead Free	1017	Low Lead Content <.25% by weighted average
MX132LF/U	3 in. (DN80)	Flanged	50 Cv	113°F to 149°F (45°C to 65°C)	3 inch Flanged MX Mixing Valves Lead Free	1017	Low Lead Content <.25% by weighted average

MX Series Valves Replacement Parts

Material Number	Pipe Size in/(DN)	Description
MX050-RP/U	1/2 in. (DN15)	1/2 in. Recirculation adapter kit MX mixing valves. Includes 1/2 in. MNPT union nut and gasket
MX100-RP/U	1 in. (DN25)	Replacement gasket kit for MX127 mixing valves. Includes 3, 1-in. gaskets
MX125-RP/U	1 1/4 in. (DN32)	Replacement gasket kit for MX128 mixing valves. Includes 3, 1-1/4-in. gaskets
MX150-RP/U	1 1/2 in. (DN40)	Replacement gasket kit for MX129 mixing valves. Includes 3, 1-1/2-in. gaskets
MX200-RP/U	2 in. (DN50)	Replacement gasket kit for MX130 mixing valves. Includes 3, 2-in. gaskets
MX250-RP/U	2 1/2 in. (DN65)	Replacement gasket kit for MX131 mixing valves. Includes 3, 2-1/2-in. gaskets

DS05 Lead Free Pressure Regulating Valve

The Resideo Braukmann DS05 is a high-quality balanced pressure regulating valve that maintains a constant outlet pressure over a wide range of inlet supply pressures. It has a simple design with NPT or pre-assembled Push Connect and PEX F-1960 fittings. Available in 3/4-in. and 1-in., the six SKUs require no additional parts, making it a low-cost go-to for every new construction. It is suitable for potable water and irrigation applications, both indoor and outdoor.

- Approvals - ASSE 1003-220 and 1061, IAPMO, CSA, Low Lead Compliant, NSF/ANSI 61
- Set static pressure between 15–80PSI adjustment range from the convenient tamper-resistant screwdriver slot.
- Simple design with NPT or pre-assembled Push Connect and PEX F-1960 fittings.

Materials: Lead-free ECO BRASS®
Outlet Pressure: Factory set at 50 psi (344.7 kPa)
Maximum Inlet Pressure Rating: 250 psi (1724 kPa)
Connections: Female NPT threaded, PEX F1960, and Push Connect

Approvals, ASSE: 1003-2020 Listed
Approvals, IAPMO: Listed
Approvals, CSA: Certified (B356-10)
Approvals, NSF/ANSI: 61/372 Compliant
Approvals, ASSE: 1061 (Push Connect only)

Material Number	Pipe Size in/(DN)	Connection Type	Approvals, ASSE	Operating Temperature °F (°C)	Description
DS05-101-LF/U	3/4 in. (DN20)	FNPT	1003-2020	140°F Maximum (60°C Maximum)	3/4 Inch DS05 lead-free pressure regulating valve (PRV) - NPT
DS05-101-SB-LF/U	3/4 in. (DN20)	Push Connections	1003-2020, 1061	140°F Maximum (60°C Maximum)	3/4 Inch DS05 lead-free pressure regulating valve (PRV) - Push Connections
DS05-101-PEX-LF/U	3/4 in. (DN20)	PEX F-1960 Connections	1003-2020	140°F Maximum (60°C Maximum)	3/4 Inch DS05 lead-free pressure regulating valve (PRV) - PEX Connections
DS05-102-LF/U	1 in. (DN25)	FNPT	1003-2020	140°F Maximum (60°C Maximum)	1 Inch DS05 lead-free pressure regulating valve (PRV) - NPT
DS05-102-SB-LF/U	1 in. (DN25)	Push Connections	1003-2020, 1061	140°F Maximum (60°C Maximum)	1 Inch DS05 lead-free pressure regulating valve (PRV) - Push Connections
DS05-102-PEX-LF/U	1 in. (DN25)	PEX F-1960 Connections	1003-2020	140°F Maximum (60°C Maximum)	1 Inch DS05 lead-free pressure regulating valve (PRV) - PEX Connections

DS06 "DialSet" Lead Free Pressure Regulating Valve

With the DialSet Pressure Regulating Valve, you don't need a pressure gauge. The built-in adjustment dial eliminates the need for a gauge when adjusting the static pressure setting, but there is also an easily accessible gauge port on either side if you need it. This product has the capability to be installed by one individual and the reliability that helps to increase your profits through fewer callbacks. Plus, the DialSet PRV has the flexibility to work in a variety of applications.

- Built-In Dial-Set™- no guage is needed to install or set static pressure.
- Noncorroding Unitized Cartridge - contains all working parts and is easily replaceable
- Outlet adjustment range of 25 psi to 90 psi make it suitable for household, commercial, industrial and turf-and-irrigation applications.
- Install it just about anywhere. The internal and external threading allows for use in thread-by-thread, singleunion or double-union configurations.
- 1/4" NPT tap accessible from both sides to validate output
- Built in strainer to simplify maintenance
- Approvals - ASSE 1003-2020, IAPMO, CSA, Low Lead Compliant, NSF/ANSI 61

Materials: Lead-free ECO BRASS®, Fabric Reinforced Diaphragm, Stainless Steel and Engineered Thermoplastics.
Outlet Pressure Adjustment Range (psi): 25-90 psi
Maximum Inlet Pressure Rating (psi): 250 psi
Gauge Tap: 1/4 in. NPT (two, one on each side of body).

Calibrated Adjustment Dial: Yes
Reducing Ratio: 10:1 Maximum
Approvals, ASSE: Certified 1003-2020
Approvals, IAPMO: Listed
Approvals, CSA: Certified (B356-10)

Material Number	Pipe Size in/(DN)	Connection Type	Operating Temperature °F (°C)	Description
DS06-100-DUS-LF/U	1/2 in. (DN15)	Female NPT Threaded Inlet & Outlet Externally threaded for Unions	140°F Maximum (60°C Maximum)	1/2 Inch DS06 "dialset" lead-free pressure regulating valve (PRV) - double union sweat
DS06-100-DUT-LF/U	1/2 in. (DN15)	Female NPT Threaded Inlet & Outlet Externally threaded for Unions	140°F Maximum (60°C Maximum)	1/2 Inch DS06 "dialset" lead-free pressure regulating valve (PRV) - double union NPT
DS06-100-LF/U	1/2 in. (DN15)	Female NPT Threaded Inlet & Outlet Externally threaded for Unions	140°F Maximum (60°C Maximum)	1/2 Inch DS06 "dialset" lead-free pressure regulating valve (PRV) - union body only
DS06-100-SUS-LF/U	1/2 in. (DN15)	Female NPT Threaded Inlet & Outlet Externally threaded for Unions	140°F Maximum (60°C Maximum)	1/2 Inch DS06 "dialset" lead-free pressure regulating valve (PRV) - single union sweat
DS06-100-SUT-LF/U	1/2 in. (DN15)	Female NPT Threaded Inlet & Outlet Externally threaded for Unions	140°F Maximum (60°C Maximum)	1/2 Inch DS06 "dialset" lead-free pressure regulating valve (PRV) - single union NPT
DS06-101-DUS-LF/U	3/4 in. (DN20)	Female NPT Threaded Inlet & Outlet Externally threaded for Unions	140°F Maximum (60°C Maximum)	3/4 Inch DS06 "dialset" lead-free pressure regulating valve (PRV) - double union sweat
DS06-101-DUT-LF/U	3/4 in. (DN20)	Female NPT Threaded Inlet & Outlet Externally threaded for Unions	140°F Maximum (60°C Maximum)	3/4 Inch DS06 "dialset" lead-free pressure regulating valve (PRV) - double union NPT
DS06-101-LF/U	3/4 in. (DN20)	Female NPT Threaded Inlet & Outlet Externally threaded for Unions	140°F Maximum (60°C Maximum)	3/4 Inch DS06 "dialset" lead-free pressure regulating valve (PRV) - union body only
DS06-101-SUS-LF/U	3/4 in. (DN20)	Female NPT Threaded Inlet & Outlet Externally threaded for Unions	140°F Maximum (60°C Maximum)	3/4 Inch DS06 "dialset" lead-free pressure regulating valve (PRV) - single union sweat
DS06-101-SUT-LF/U	3/4 in. (DN20)	Female NPT Threaded Inlet & Outlet Externally threaded for Unions	140°F Maximum (60°C Maximum)	3/4 Inch DS06 "dialset" lead-free pressure regulating valve (PRV) - single union NPT
DS06-102-DUS-LF/U	1 in. (DN25)	Female NPT Threaded Inlet & Outlet Externally threaded for Unions	140°F Maximum (60°C Maximum)	1 Inch DS06 "dialset" lead-free pressure regulating valve (PRV) - double union sweat
DS06-102-DUT-LF/U	1 in. (DN25)	Female NPT Threaded Inlet & Outlet Externally threaded for Unions	140°F Maximum (60°C Maximum)	1 Inch DS06 "dialset" lead-free pressure regulating valve (PRV) - double union NPT
DS06-102-LF/U	1 in. (DN25)	Female NPT Threaded Inlet & Outlet Externally threaded for Unions	140°F Maximum (60°C Maximum)	1 Inch DS06 "dialset" lead-free pressure regulating valve (PRV) - union body only
DS06-102-SUS-LF/U	1 in. (DN25)	Female NPT Threaded Inlet & Outlet Externally threaded for Unions	140°F Maximum (60°C Maximum)	1 Inch DS06 "dialset" lead-free pressure regulating valve (PRV) - single union sweat
DS06-102-SUT-LF/U	1 in. (DN25)	Female NPT Threaded Inlet & Outlet Externally threaded for Unions	140°F Maximum (60°C Maximum)	1 Inch DS06 "dialset" lead-free pressure regulating valve (PRV) - single union NPT
DS06-103-LF/U	1-1/4 in. (DN32)	Female NPT Threaded Inlet & Outlet Externally threaded for Unions	140°F Maximum (60°C Maximum)	1-1/4 Inch DS06 "dialset" lead-free pressure regulating valve (PRV) - union body only
DS06-103-DUS-LF/U	1 1/4 in. (DN32)	Female NPT Threaded Inlet & Outlet Externally threaded for Unions	140°F Maximum (60°C Maximum)	1 1/4 Inch DS06 "dialset" lead-free pressure regulating valve (PRV) - double union sweat
DS06-103-DUT-LF/U	1 1/4 in. (DN32)	Female NPT Threaded Inlet & Outlet Externally threaded for Unions	140°F Maximum (60°C Maximum)	1 1/4 Inch DS06 "dialset" lead-free pressure regulating valve (PRV) - double union NPT
DS06-103-SUS-LF/U	1 1/4 in. (DN32)	Female NPT Threaded Inlet & Outlet Externally threaded for Unions	140°F Maximum (60°C Maximum)	1 1/4 Inch DS06 "dialset" lead-free pressure regulating valve (PRV) - single union sweat

Pressure Regulating Valve

Material Number	Pipe Size in/(DN)	Connection Type	Operating Temperature °F (°C)	Description
DS06-103-SUT-LF/U	1 1/4 in. (DN32)	Female NPT Threaded Inlet & Outlet Externally threaded for Unions	140°F Maximum (60°C Maximum)	1 1/4 Inch DS06 "dialset" lead-free pressure regulating valve (PRV) - single union NPT
DS06-104-DUS-LF/U	1 1/2 in. (DN40)	Female NPT Threaded Inlet & Outlet Externally threaded for Unions	140°F Maximum (60°C Maximum)	1 1/2 Inch DS06 "dialset" lead-free pressure regulating valve (PRV) - double union sweat
DS06-104-DUT-LF/U	1 1/2 in. (DN40)	Female NPT Threaded Inlet & Outlet Externally threaded for Unions	140°F Maximum (60°C Maximum)	1 1/2 Inch DS06 "dialset" lead-free pressure regulating valve (PRV) - double union NPT
DS06-104-LF/U	1-1/2 in. (DN40)	Female NPT Threaded Inlet & Outlet Externally threaded for Unions	140°F Maximum (60°C Maximum)	1-1/2 Inch DS06 "dialset" lead-free pressure regulating valve (PRV) - union body only
DS06-104-SUS-LF/U	1 1/2 in. (DN40)	Female NPT Threaded Inlet & Outlet Externally threaded for Unions	140°F Maximum (60°C Maximum)	1 1/2 Inch DS06 "dialset" lead-free pressure regulating valve (PRV) - single union sweat
DS06-104-SUT-LF/U	1 1/2 in. (DN40)	Female NPT Threaded Inlet & Outlet Externally threaded for Unions	140°F Maximum (60°C Maximum)	1 1/2 Inch DS06 "dialset" lead-free pressure regulating valve (PRV) - single union NPT
DS06-105-DUS-LF/U	2 in. (DN50)	Female NPT Threaded Inlet & Outlet Externally threaded for Unions	140°F Maximum (60°C Maximum)	2 Inch DS06 "dialset" lead-free pressure regulating valve (PRV) - double union sweat
DS06-105-DUT-LF/U	2 in. (DN50)	Female NPT Threaded Inlet & Outlet Externally threaded for Unions	140°F Maximum (60°C Maximum)	2 Inch DS06 "dialset" lead-free pressure regulating valve (PRV) - double union NPT
DS06-105-SUS-LF/U	2 in. (DN50)	Female NPT Threaded Inlet & Outlet Externally threaded for Unions	140°F Maximum (60°C Maximum)	2 Inch DS06 "dialset" lead-free pressure regulating valve (PRV) - single union sweat
DS06-105-SUT-LF/U	2 in. (DN50)	Female NPT Threaded Inlet & Outlet Externally threaded for Unions	140°F Maximum (60°C Maximum)	2 Inch DS06 "dialset" lead-free pressure regulating valve (PRV) - single union NPT

FK06 "DialSet" Lead Free Pressure Regulating Filter Combination

The FK06 DialSet Pressure Regulating Filter Combination is a high-quality pressure regulating valve and rinsable filter that maintains a constant outlet pressure over a wide range of inlet supply pressures and ensures a continuous supply of filtered water. It is suitable for potable water and irrigation applications. The downstream pressure adjustment dial eliminates the need for a pressure gauge when adjusting the pressure setting (static pressure only).

Model: FK06 DialSet Pressure Regulating Filter Combination
Regulator Mechanism: Fabric-reinforced diaphragm.
Filter Mechanism: Stainless steel 50 micron rinsable filter insert.
Seat Design: Balanced single seat construction.
Inlet Pressure (Maximum): 250 psi maximum.
Reduced Pressure Range: 25 to 90 psi (1/2 in. to 2 in.).
Outlet Pressure: Factory set at 60 psi (414 kPa).
Dial Calibration: ± 4 psi.
Differential: 14.5 psi minimum (inlet to outlet).
Fluid Temperature (Maximum): Water: 104° F (40° C).
Ambient Temperature Range: 33° F to 140° F (1° C to 60° C).
Pipe Sizes Available: 3/4 in., 1 in., 1-1/4 in. available.

Body: Lead-free ECO BRASS®
Internal Parts: Stainless steel and engineered plastics
Regulator Mechanism: Fabric-reinforced diaphragm
Lead Free Plumbing Code: Compliant
Connections: Can be configured as female thread-by-thread, double-union, NPT threaded or sweat.

Gauge Tap: 1/4" NPT.
Approvals, ASSE: 1003-2020 Listed
Approvals, CSA: Certified (B356-10)
Approvals, NSF/ANSI: 61 Compliant

Material Number	Pipe Size in/(DN)	Connection Type	Operating Temperature °F (°C)	Description
FK06-101-DUS-LF	3/4 in. (DN20)	Double-Union Sweat	104° F Maximum (40° C) Maximum	3/4 Inch FK06 "dialset" lead-free pressure regulating valve (PRV) with whole house filter - double union sweat
FK06-102-DUS-LF	1 in. (DN25)	Double-Union Sweat	104° F Maximum (40° C) Maximum	1 Inch FK06 "dialset" lead-free pressure regulating valve (PRV) with whole house filter - double union sweat
FK06-103-DUS-LF	1-1/4 in. (DN32)	Double-Union Sweat	104° F Maximum (40° C) Maximum	1-1/4 Inch FK06 "dialset" lead-free pressure regulating valve (PRV) with whole house filter - double union sweat
FK06-101-DUT-LF	3/4 in. (DN20)	Double-Union Threaded	104° F Maximum (40° C) Maximum	3/4 Inch FK06 "dialset" lead-free pressure regulating valve (PRV) with whole house filter - double union thread
FK06-102-DUT-LF	1 in. (DN25)	Double-Union Threaded	104° F Maximum (40° C) Maximum	1 Inch FK06 "dialset" lead-free pressure regulating valve (PRV) with whole house filter - double union thread
FK06-103-DUT-LF	1-1/4 in. (DN32)	Double-Union Threaded	104° F Maximum (40° C) Maximum	1-1/4 Inch FK06 "dialset" lead-free pressure regulating valve (PRV) with whole house filter - double union thread

DS06LF Pressure Regulating Valves—Repair Parts

Material Number	Description
D06FA-1/2	DS06 Low-Lead Replacement Parts 1/2" & 3/4" Valve Insert without Filter
D06FA-11/2	DS06 Low-Lead Replacement Parts 1 1/2" & 2" Valve Insert without Filter
D06FA-1B	DS06 Low-Lead Replacement Parts 1" & 1 1/4" Valve Insert without Filter
ES06F-1/2A	DS06 Low-Lead Replacement Parts 1/2" & 3/4" Replacement Filter Insert
ES06F-11/2A	DS06 Low-Lead Replacement Parts 1 1/2" & 2" Replacement Filter Insert
ES06F-1B	DS06 Low-Lead Replacement Parts 1" & 1 1/4" Replacement Filter Insert
SB06T-1	DS06 Low-Lead Replacement Parts 1" & 1 1/4"" Black Filter Bowl with O-Ring
SB06T-1/2	DS06 Low-Lead Replacement Parts 1/2" & 3/4" Black Filter Bowl with O-Ring
SB06T-11/2	DS06 Low-Lead Replacement Parts 1 1/2" & 2" Black Filter Bowl with O-Ring
ZR06K	Double ring wrench for removing black spring bonnet for DS06 and FK06

DS06 Pressure Reducing Valves- Union Kits

Material Number	Description
272840/U	Union gaskets for 1/2 in. (package of 2)
272841/U	Union gaskets for 3/4 in. (package of 2)
272842/U	Union gaskets for 1 in. (package of 2)
272843/U	Union gaskets for 1 1/4 in. (package of 2)
272858/U	Union Gasket for 1 1/2 in. (package of 2)
272859/U	Union Gasket for 2 in. (package of 2)
K06U1069/U	Union kit for 1/2-in. NPT valves. Includes union nut, threaded tailpiece, and gasket
K06U1077/U	Union kit for 3/4-in. NPT valves. Includes union nut, threaded tailpiece, and gasket
K06U1085/U	Union kit for 1-in. NPT valves. Includes union nut, threaded tailpiece, and gasket
K06U1093/U	Union kit for 1/2-in. sweat valves. Includes union nut, sweat tailpiece, and gasket
K06U1101/U	Union kit for 3/4-in. sweat valves. Includes union nut, sweat tailpiece, and gasket
K06U1119/U	Union kit for 1-in. sweat valves. Includes union nut, sweat tailpiece, and gasket
K06U1135/U	Union kit for 1-1/4-in. NPT valves. Includes union nut, threaded tailpiece, and gasket
K06U1143/U	Union kit for 1-1/4-in. sweat valves. Includes union nut, sweat tailpiece, and gasket
K06U1037/U	Union kit with threaded tailpiece for 1 1/2 in. Includes union nut and gasket
K06U1045/U	Union kit with threaded tailpiece for 2in. Includes union nut and gasket
K06U5034/U	Union kit for 1 1/2 in. Sweat. Includes union nut, threaded tailpiece, and gasket
K06U5042/U	Union kit for 2 in. Sweat. Includes union nut, threaded tailpiece, and gasket

FK06 Replacement Parts

Material Number	Description
D06FA-1/2	Low-Lead pressure regulating valve replacement insert for 1/2 and 3/4 inch valves
D06FA-1B	Low-Lead pressure regulating valve replacement insert for 1 and 1-1/4 inch valves
KF06-1/2AZ	Clear filter bowl for FF06 or FK06 3/4 inch
KF06-1AZ	Clear filter bowl for FF06 or FK06 1 inch or 1-1/4 inch
0903127	O-ring-set for carrier body for AS06-1/2C (pack of 10)
0903128	O-ring-set for carrier body for AS06-1C (pack of 10
AS06-1/2C	Replacement filter insert 50 micron for 3/4 inch filter
AS06-1C	Replacement filter insert 50 micron for 1 and 1-1/4 inch filter
0901246	O-ring-set for 1/2 or 3/4 inch filter bowl (pack of 10) for D06F, D06H, D06N FF06 or FK06
0901499	O-ring-set for 1 or 1-1/4 inch filter bowl (pack of 10) for FF06 or FK06
ZR06F	Double ring wrench for removing filter bowl for FF06 and FK06 filters

*Upgrade your application from a DS06 to an FK06 by using the FK06 replacement parts.

DS06-JK-10-LF Jumper Kit

Commonly used in residential and commercial new construction, Jumper Kits serve as a temporary place holder for Pressure Reducing Valves in potable water systems. Using a Jumper Kit ensures Pressure Reducing Valves are not vandalized or stolen from unsecured or open job sites. Additionally, the Jumper Kit allows plumbing and piping to be tested for leaks as well flushed prior to the installation of Pressure Reducing Valves.

The DS06-JK-10*-LF Jumper Kits are compatible with both the DS06 and FK06 Pressure Reducing Valves.

Model: DS06-JK-10*-LF
Medium: Water
Filter Mechanism: Stainless steel fine filter mesh
Operating Pressure @ 73F1: 250 PSI
Fluid Temperature (Maximum): 140°F

Ambient Temperature Range: 33°F to 140°F
Union Nut and Tailpiece Material: Brass
Strainer Material: Stainless Steel w/ EPDM Rubber
Plastic Tube Material: PVC
Gasket Material: EPDM/NB

Material Number	Pipe Size	Connection Type	Description	Order Quantities
DS06-JK-101-LF/B	3/4"	Union Sweat	3/4" Jumper Kit; Pipe, Unions, Tailpiece, Strainer	24
DS06-JK-102-LF/B	1"	Union Sweat	1" Jumper Kit; Pipe, Unions, Tailpiece, Strainer	24
DS06-JK-103-LF/B	1-1/4"	Union Sweat	1-1/4" Jumper Kit; Pipe, Unions, Tailpiece, Strainer	8
DS06-JK-104-LF/B	1-1/2"	Union Sweat	1-1/2" Jumper Kit; Pipe, Unions, Tailpiece, Strainer	8

F76 Water Filters

High flow capacity water filter used to remove sediment and debris from residential or commercial water systems.

- Ideally suited for sediment removal applications that would quickly plug and restrict the flow of normal filters.
- Used as a prefilter, the F76 protects elements of the water system, including specialized treatment devices or other common fixtures and appliances.
- The flow filtering capacity and ease of cleaning make the F76S ideal for the most demanding applications.
- Built-in secondary filter provides an uninterrupted supply of filtered water during backwashing.

Connection Type: NPT External Threaded and Sweat
Approximate Dimensions: 17 11/16 in. high x 6 11/16 in. wide x 3 13/16 in. deep (449 mm high x 170 mm wide x 97 mm deep)
Materials: Body: Brass; Sump: Clear Plastic
Screen Size: 100 micron screen

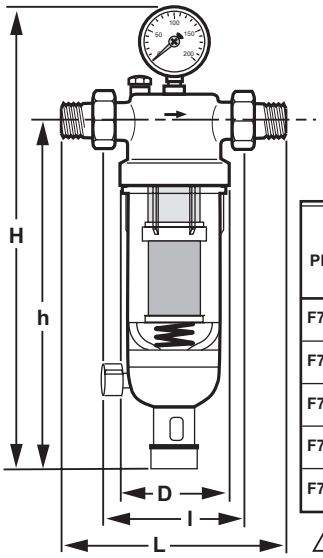

PRODUCT NUMBER AND SIZE		DIMENSIONS IN INCHES (MM)					
		L	I	D	H	h	1 WEIGHT
F76S1007	1/2 IN.	6-11/16 (170)	4-5/16 (110)	3-13/16 (97)	17-11/16 (449)	13-13/16 (350)	6.4 (2.9)
F76S1015	3/4 IN.	7 (178)	4-5/16 (110)	3-13/16 (97)	17-11/16 (449)	13-13/16 (350)	6.4 (2.9)
F76S1023	1 IN.	8-1/4 (209)	5-1/8 (130)	3-13/16 (97)	17-7/8 (453)	13-13/16 (350)	6.8 (3.1)
F76S1031	1-1/4 IN.	8-3/4 (222)	5-1/8 (130)	3-13/16 (97)	17-7/8 (453)	13-13/16 (350)	7.3 (3.3)
F76S1049	1-1/2 IN.	9-11/16 (246)	5-5/16 (150)	4-3/4 (119)	20-15/16 (532)	16-7/16 (417)	8.8 (4.0)

1 WEIGHT IN POUNDS (KILOGRAMS)

M34737

Material Number	Pipe Size in/(DN)	Ambient Temperature Range	Maximum Safe Operating Pressure (psi)	Weight	Capacity (Cv)	Description	Includes
F76S1007	1/2 in. (DN15)	104°F Maximum (40°C Maximum)	230 psi	6.4 lb (2.9 kg)	5.6 Cv	1/2 inch Water filter	gauge and service wrench
F76S1015	3/4 in. (DN20)	104°F Maximum (40°C Maximum)	230 psi	6.4 lb (2.9 kg)	8.4 Cv	3/4 inch Water filter	gauge and service wrench
F76S1023	1 in. (DN25)	104°F Maximum (40°C Maximum)	230 psi	6.8 lb (3.1 kg)	11.4 Cv	1 inch Water filter	gauge and service wrench
F76S1031	1-1/4 in. (DN32)	104°F Maximum (40°C Maximum)	230 psi	7.3 lb (3.3 kg)	12.4 Cv	1-1/4 inch Water filter	gauge and service wrench
F76S1049	1-1/2 in. (DN40)	104°F Maximum (40°C Maximum)	230 psi	8.8 lb (4.0 kg)	24.4 Cv	1-1/2 inch Water filter	gauge and service wrench
F76S1056	2 in. (DN50)	104°F Maximum (40°C Maximum)	230 psi	10.6 lb (4.8 kg)	25.5 Cv	2 inch Water Filter	gauge and service wrench

Water Sediment Filter Parts and Accessories

Material Number	Description	Used With
0900748	(BP10) Seal Ring	F76S 2+2
0901444	F76S Gasket 1/2-3/4"	F74C or F76S or FF06
0901445	F76S Gasket 1"	F74C or F76S or FF06
0901446	F76S Gasket 1-1/4"	F76S
0901447	F76S Gasket 1-1/2"	F76S
0901448	F76S Gasket 2"	F76S
AF11S-11/2A	100 Micron Screen kit for F76S Water Filter 1-1/2 in. to 2 in.	F76S
AF11S-11/2B	20 Micron Screen kit for F76S Water Filter 1-1/2 in. to 2 in.	F76S
AF11S-11/2C	50 Micron Screen kit for F76S Water Filter 1-1/2 in. to 2 in.	F76S
AF11S-11/2D	200 Micron Screen kit for F76S Water Filter 1-1/2 in. to 2 in.	F76S
AF11S-1A	100 Micron Screen kit for F76S Water Filter 1/2 in. to 1-1/4 in.	F76S
AF11S-1B	20 Micron Screen kit for F76S Water Filter 1/2 in. to 1-1/4 in.	F76S
AF11S-1C	50 Micron Screen kit for F76S Water Filter 1/2 in. to 1-1/4 in.	F76S
AF11S-1D	200 Micron Screen kit for F76S Water Filter 1/2 in. to 1-1/4 in.	F76S
AS06-1A	Filter mesh and sump O-ring (5 pcs)	

MV876 Automatic Backwash Control

The MV876B Automatic-Backwash Control is available as an accessory. This control is fitted to the drain valve and is programmed by the user to automatically perform the backwash function according to the desired interval.

- Bayonet fitting simplifies upgrade to automatic backwash.
- 16 field-selectable backwash intervals (from every four minutes to once every three months) eliminate need for external timer.
- Connections for external control on the MV876 provide for use in automated systems and differential pressure control.
- MV876 can be manually activated to initiate backwash.
- Battery (AA) backup to ensure completion of backwash cycle in spite of power loss.

Backwash Intervals and Selection: 16 intervals from 4 min to 3 months, field adjustable via keypad
Display: Digital
Approximate Dimensions: 6 in. high, 2-3/4 in wide, 6-5/16 in. deep (152 mm high, 70 mm wide, 160 mm deep)

Electrical Ratings: 24 Vac, 10 W
Cycle Time (sec): 20 sec

Material Number	Description
MV876B1018	Automatic backwash control, fits 1/2 in. to 2 in. F76S models and F74C models.

WT88 Series Gas Water Heater Control

With Resideo Water Heater Controls, only eight models are needed to replace multiple A.O. Smith, Bradford White, and Rheem controls. Consolidate your inventory while expanding your sales opportunities and capturing more business.

Application

The WT88xx Water Heater Control is designed for use in Standing Pilot applications using an immersion well for water temperature sensing. All models of WT88xx controls include an integrated NTC temperature sensor.

The WT88xx controls are powered from a thermopile heated by the standing pilot flame. CS88xx pilot assemblies are designed for use with this control.

The immersion well for sensing water temperature has matched NTC thermistor sensors. These sensors provide the fail-safe mechanism through which the WT88xx controls can provide both accurate water temperature control as well as water temperature limit (Temperature Cut-Out [TCO]) function.

Specifications

Important
WT88xx controls provide direct replacement only.

Pressure Regulator: The outlet pressure regulator setting is shown on the product label.
Inlet Pressure Range: See appliance rating plate for inlet pressure range recommendation.
0.5 PSI (14.0 in. w.c.) maximum inlet pressure allowed for proper operation.
Body Pattern: 90 degrees with 1/2 in. inlet and 1/2 in. inverted flare outlet.
Mounting: Mounting in upright position only.
Control Input:
Voltage Minimum: 350 mV dc, open circuit.
Voltage Maximum: 850 mV dc, open circuit.
Regulation Range:
Natural Gas: Minimum: 30,000 Btuh.
Maximum: 85,000 Btuh.

Ambient Temperature Range: 32 to 150 °F (0 to 66 °C)
Operating Range: 32 to 150 °F (0 to 66 °C)*
*Valve will operate at 0 °F (-18 °C) but valve characteristics can not be guaranteed until ambient temperature reaches 32 °F (0 °C).
Storage Range: -40 to 150 °F (-40 to 66 °C)
Humidity: 95% non-condensing at 104 °F (40 °C)
Approvals: This device is certified by Canadian Standards Association (CSA) to the following standards:
ANSI Z21.20
ANSI Z21.23
ANSI Z21.78
ANSI Z21.87
CAN/CSA-C22.2 No. 199-M89
CAN1-6.6-M78
CSA 4.6
CSA 6.20
Accessory Parts: Pilot Assembly CS88xx

Aftermarket SKUs	Resideo OEM Part Number	OEM Part Number	OEM Part Number Replacements	OEM
WT8840A1000/U 1" insulation tank, 4" WC setting	WV8840A1000/U WV8840A1001/U	222-47463-01A 222-47463-01E	415-52907-01	Bradford White
WT8840A1500/U 2" insulation tank, 4" WC setting	WV8840A1050/U WV8840A1051/U	222-47463-02A 222-47463-02E	415-52907-02	Bradford White
WT8860A1000 2" insulation tank, 5" WC setting - ULN	WV8860A1009 WV8860A1010	222-48863-01	415-52915-01	Bradford White
WT8840B1000/U 1" insulation tank, 5" WC setting	WV8840B1042/U WV8840B1109/U WV8840B1110/U	316910-000 316910-000 321166-000	100112336 9007884005	A.O. Smith
WT8840B1500/U 2" insulation tank, 5" WC setting	WV8840B1059/U WV8840B1117/U WV8840B1118/U	316910-001 316910-001 321166-001	100112337 9007885005	A.O. Smith
WT8860B1000 2" insulation tank, 5" WC setting - ULN	WV8860B1309 WV8860B1310	100073010 318618-000	100093970 9007631005	A.O. Smith
WT8840C1000/U 1.5" insulation tank, 4" WC setting	WV8840C1406/U	AP16910E	SP20832E	Rheem
WT8840C1500/U 2" insulation tank, 4" WC setting	WV8840C1605/U	AP16910B	SP20832B	Rheem

L1 WiFi Water Leak and Freeze Detector

The average water leak causes $7000 in damage*. The L1 Water Leak and Freeze Detector can detect water with sensors on base of unit or has expanded coverage with included 5 ft. water sensing cable. Entire cable detects water.

- Conveniently place near sinks, washers, water heaters, sump pumps—anywhere leaks could happen. Battery life lasts up to 3 years without incident, depending on usage.
- Notification messages can alert you or your family/ friends, wherever you are, while audible (100 dB alarm) alerts sound when you are at home.
- Use to detect temperatures that can freeze pipes, and humidity that could damage valuables.
- Runs on WiFi - No extra hub or hardware purchase required.
- Daisy chain extra cable sensors and cover up to 500 feet of space with one leak detector.
- Reusable even after detecting an incident, unless fully submerged in water. After an alarm, simply wipe dry the detector and cable sensors and place them back into service.

** American Insurance Association*

Material Number	Description	Power Method	Dimensions (in.)	Dimensions (mm)	Includes	Color
CHW3610W8001/U	1 Pack Trade Battery Approvals: FCC, ISED.	Battery Power	3-1/16 in. square x 1-1/4 in. high for each detector	78 mm square x 32 mm deep for each detector	Package includes 1 water leak detector, 3 AA alkaline batteries, mounting screws, and a 5-foot cable sensor.	White
YCHW3000W3003/U	3 Pack Trade Battery Approvals: FCC, ISED.	Battery Power	3-1/16 in. square x 1-1/4 in. high for each detector	78 mm square x 32 mm deep for each detector	Package includes 3 individual packs, each containing a water leak detector, 3 AA alkaline batteries, mounting screws, and a 5-foot cable sensor.	White
WLD3CABLE	WiFi Water Leak Detector Accessory Cable Sensor (5-ft)	n/a	n/a	n/a	n/a	White

RWD Water Alarm

RWD11/RWD14

RWD21

RWD42

Material Number	Description	Power Method	Dimensions (in.)	Dimensions (mm)	Includes	Color
RWD11/C	One Time Use Water Leak Detector with Integral Alarm	Battery	1-3/4 Dia x 1-3/8 H	45 Dia x 35 H	Battery included (not replaceable)	White
RWD14/A	One Time Use Water Leak Detector with Integral Alarm	Battery	1-3/4 Dia x 1-3/8 H	45 Dia x 35 H	Battery included (not replaceable); 4 pack	White
RWD21/A	Multiple Use Water Leak Detector with Integral Alarm	Battery	3-3/4 Dia x 1-3/16 H	86 Dia x 30 H	Battery NOT included, 9V (replaceable)	White
RWD42/A	Multiple Use Water Leak Detector with Water Sensing Cable	Battery	3-5/8 W x 3-5/8 L x 1-1/4 H	91 W x 91 L x 32 H	Batteries included, AA (replaceable); 5 ft water sensing cable	White

L5 Series Water Leak and Shutoff

When paired with WiFi Leak Detector(s), as soon as water is detected, the L5 WiFi Water Leak Shutoff Valve will shut off the water to reduce potential water damage. One L5 can be paired up to 30 leak detectors.

- Connected and in control: The Resideo App can be setup as a water leak detection control panel with notifications, customized alerts, and pre-set shutoff locations. The wireless functionality means customers can control their home's water from anywhere.
- Automatic and accurate: The Shutoff Valve shuts off the home's water supply when it detects water via the 5-ft sensor cable attached to the device. Extend the leak detection range up to 500-ft by adding additional Sensor Cables.
- Even better together: Easily pair the Shutoff Valve with any Resideo WiFi Water Leak and Freeze Detectors for reliable water leak detection and an automatic shutoff response.
- A legacy of quality: For over 100 years, Braukmann has built a reputation for providing a complete portfolio of reliable water solutions for contractors and homeowners.
- Be their pro: Customers can set alerts on the Resideo App to notify them of any leak or shutoff events and provide the support they need right away.

Specifications

Includes: L5 Actuator; Lead-free Ball Valve; Power Supply Adapter; Actuator to Ball Valve Metal Clip; 5 ft Water Leak Detector Cable
Frequency: 50 Hz; 60Hz
Approvals, Canadian Standards Association: CAN/CSA C22.2
Voltage: 100 to 240 V
Approvals, CE: CE EMC 2014/30/EU; CE RED 2014/53/EU
Approvals, Others: RoHS 2011/65/EU, ES 50040083; REACH 1907/2006; Proposition 65; FCC part 15 subpart C
Ambient Temperature Range (C): 0°C to 45°C
Ambient Temperature Range (F): 32°F to 113°F

Connection Type: NPT
Pressure Range (psi): Pressure resistance min. PN10
Body Pattern: Two-way
Pipe Size (inch): 1 in
Pipe Size (DN): DN25
Fluid Temperature (C): 2°C to 65°C
Fluid Temperature (F): 36°F to 149°F
Valve Type: Ball Valve

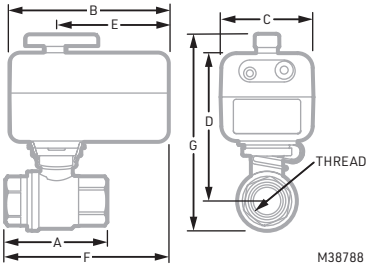

Model	A Inch (mm)	B Inch (mm)	C Inch (mm)	D Inch (mm)	E Inch (mm)	F Inch (mm)	G Inch (mm)	Thread	Power Supply Length Inch (mm)	Description
North America										
VWS01Y-1/2	2.598 (66)	4.567 (116)	2.677 (68)	3.976 (101)	3.228 (82)	4.606 (117)	5.157 (131)	NPT 1/2 Inch	118 (3)	WIFI ACTUATOR WITH WLD SENSOR AND 1/2" NPT BALL VALVE
VWS01Y-3/4	2.953 (75)	4.567 (116)	2.677 (68)	4.252 (108)	3.228 (82)	4.685 (119)	5.669 (144)	NPT 3/4 Inch	118 (3)	WIFI ACTUATOR WITH WLD SENSOR AND 3/4" NPT BALL VALVE
VWS01Y-1	3.583 (91)	4.567 (116)	2.677 (68)	4.409 (112)	3.228 (82)	5.000 (127)	5.984 (152)	NPT 1/2 Inch	118 (3)	WIFI ACTUATOR WITH WLD SENSOR AND 1" NPT BALL VALVE
VWS01Y-11/4	4.094 (104)	4.567 (116)	2.677 (68)	4.685 (119)	3.228 (82)	5.276 (134)	6.496 (165)	NPT 3/4 Inch	118 (3)	WIFI ACTUATOR WITH WLD SENSOR AND 1-1/4" NPT BALL VALVE
VWS02Y-1/2	2.598 (66)	4.567 (116)	2.677 (68)	3.976 (101)	3.228 (82)	4.606 (117)	5.157 (131)	NPT 1 Inch	118 (3)	WIFI ACTUATOR WITH 1/2" NPT BALL VALVE
VWS02Y-3/4	2.953 (75)	4.567 (116)	2.677 (68)	4.252 (108)	3.228 (82)	4.685 (119)	5.669 (144)	NPT 1-1/4 Inch	118 (3)	WIFI ACTUATOR WITH 3/4" NPT BALL VALVE
VWS02Y-1	3.583 (91)	4.567 (116)	2.677 (68)	4.409 (112)	3.228 (82)	5.000 (127)	5.984 (152)	NPT 1/2 Inch	118 (3)	WIFI ACTUATOR WITH 1" NPT BALL VALVE
VWS02Y-11/4	4.094 (104)	4.567 (116)	2.677 (68)	4.685 (119)	3.228 (82)	5.276 (134)	6.496 (165)	NPT 3/4 Inch	118 (3)	WIFI ACTUATOR WITH 1-1/4" NPT BALL VALVE
VB-SP02Y-002	N/A	N/A	N/A	N/A	N/A	N/A	N/A	N/A	N/A	L5 WIFI ACTUATOR
VB-SP02Y-003	N/A	N/A	N/A	N/A	N/A	N/A	N/A	N/A	N/A	L5 POWER ADAPTER FOR NORTH AMERICA

T10 Pro Smart Thermostat with RedLINK®

The T10 Smart thermostat with RedLINK® features an effortless, 7-Day programmable touchscreen thermostat. Program it based on the homeowners' schedule, or let it adapt to their life as plans change. Homeowners can adjust it from anywhere using a smartphone or tablet, ensuring maximum comfort when at home and energy savings whether they are home or away.

- Uses the UWP mounting system that's standard across all T Series thermostats
- Setup and scheduling can be done at the wall on the thermostat, or using the Honeywell Home app
- Customers can program a schedule or use location-based control with geofence technology, which uses their smartphone location to save energy when they're away and make the home comfortable when they return
- Large touchscreen display
- 5-year warranty
- ENERGY STAR® Certified

Thermostat name	Program options	Power method	Display size	Stages	Dual fuel	Ventilation with ERV/HRV or damper	Wired indoor/ outdoor sensors	Service reminders	Up to 20 Wireless Indoor Sensors
THX321WF2003W/U	T10 Pro Smart Thermostat	C-wire	7.27 sq. in.	3H/2C Heat Pump + 2H/2C Conventional"	Yes	Yes	Yes	Yes	Yes
THX321WFS2001W	T10 Pro Smart Thermostat with RedLINK Room Sensor								

Temperature Sensor Accuracy: ± 1.5 °F at 70 °F (0.85 °C at 21.0 °C)
Clock Accuracy: Updates automatically when connected to Internet. When not connected to Internet ±1 minute every month (30 days) at 77°F. ± 2 minutes per month over the operating ambient temperature range.
Mounting Means: Thermostat packaged with a UWP mounting system that mounts directly on the wall in the living space using mounting screws and anchors provided. Use the cover plate (also included with thermostat) and its mounting bracket to mount the thermostat onto a vertical 2 x 4 in. junction box.
WiFi Communication: Provides remote access through smartphone or tablet when connected to WiFi and registered to Honeywell Home app. 2.4GHz or 5GHz range, 802.11 b/g/n home wireless router.
RedLINK Communication: Frequency: 900 Mhz frequency range. Re-Sync Time: RedLINK sensor re-establish communication within 6 minutes after AC power resumes.

Physical Dimensions:
Thermostat: 4.9" H x 3.7" W x 0.93" D (125.4mm x 94.1mm x 23.68mm).
Sensor: 2.60" H x 2.60" W x 0.76" D (66.25mm x 66.25mm x 19.7mm).
Display Size: 7.27 sq. in.
Power Method: 24 volts to Rc and C required (no batteries).
Power Consumption: 3 VA max.
Humidification Setting Range: 10% to 60% RH.
Dehumidification Setting Range: 40% to 80% RH.
Humidity Display Range: 0% to 99%.
Humidity Sensor Accuracy: ± 5% RH from 30% to 50% RH at 75 °F (24 °C).
Temperature Setpoint Range: Heating: 40 °F to 90 °F (4.5 °C to 32 °C). Cooling: 50 °F to 99 °F (10 °C to 37 °C).
Operating Ambient Temperature: 37 °F to 102 °F (2.8 °C to 38.9 °C)
Shipping Temperature: -20 °F to 120 °F (-28.9 °C to 48.9 °C)
Operating Relative Humidity: 5% to 90% (non-condensing)

Wireless Room Sensors

Material Number	Description
C7189R2002-2	RedLINK Wireless Room Sensor (2-Pack)

T6 Smart Thermostats

The T6 Pro Smart offers functionality that's easy to use and smart features that are easy to love. Program it based on the homeowners' schedule, or let it adapt to their life as plans change. Homeowners can adjust it from anywhere using a smartphone or tablet, ensuring maximum comfort when at home and energy savings whether they are home or away.

- Optional ventilation control for projects that need to meet the ASHRAE 62.2 standard (TH6320WF only)
- Uses the UWP mounting system that's standard across all T Series thermostats
- Setup and scheduling can be done at the wall on the thermostat, or using the Honeywell Home app
- Simple homeowner hand-off process enables customers to complete the WiFi connection process on their own
- Integrates with smart home Apple HomeKit and Amazon Alexa for customers who want to control their smart home devices from a single app
- Customers can program a schedule or use location-based control with geofence technology, which uses their smartphone location to save energy when they're away and make the home comfortable when they return
- Optional wired indoor/outdoor sensors
- Large touchscreen display
- 5-year warranty
- ENERGY STAR® Certified

Thermostat name	Program options	Power method	Display size	Stages	Dual fuel	Ventilation with ERV/HRV or damper	Wired indoor/ outdoor sensors	Service reminders	Replaces this FocusPRO® model
T6 Pro Smart TH6320WF2003	Geofencing, 7-day, 5-2, 5-1-1, 1-week or non-programmable	C-wire only	6.89 sq. in.	3H/2C Heat Pump + 2H/2C Conventional	Yes	Yes	Yes	Yes	TH6320WF1005
T6 Pro Smart TH6220WF2006	Geofencing, 7-day, 5-2, 5-1-1, 1-week or non-programmable	C-wire only	6.89 sq. in.	2H/1C Heat Pump + 2H/2C Conventional	No	No	Yes	Yes	N/A

T Series Non-connected

The T Series is a portfolio of non-connected and WiFi connected thermostats designed with contractors in mind. With an interface you know, features you trust and the quality you depend on in a sleek new aesthetic, the non-connected T Series thermostats are setting the new standard for simple.

SIMPLE SELECTION

We've streamlined our legacy portfolio of 20+ non-connected FocusPRO® and PRO thermostats down to just seven non-connected T Series thermostats, helping you simplify inventory management and product selection.

SIMPLE INSTALLATION

All T Series thermostats use the same UWP mounting system, helping you standardize your training program, install process and truck stock. Install one and you can install them all.

Material Number	Description	Program Options	Power Method	Display Size	Stages	Dual Fuel	Wired indoor/outdoor sensors	Filter Change reminder
TH6320U2008/U	T6 Pro Thermostat	7-day, 5-2, 5-1-1 or non-programmable"	Battery or C-wire	5.44 sq. in.	3H/2C Heat Pump + 2H/2C Conventional	Yes	Yes. Outdoor sensor for lockouts only. No display	Yes
TH6220U2000/U	T6 Pro Thermostat	7-day, 5-2, 5-1-1 or non-programmable"		5.44 sq. in.	2H/1C Heat Pump + 2H/2C Conventional	Yes	Yes. Outdoor sensor for lockouts only. No display	Yes
TH6210U2001/U	T6 Pro Thermostat	7-day, 5-2, 5-1-1 or non-programmable"		5.44 sq. in.	2H/1C Heat Pump + 1H/1C Conventional	No	No	Yes
TH4210U2002/U	T4 Pro Thermostat	7-day, 5-2, 5-1-1 or non-programmable"		3.93 sq. in.	2H/1C Heat Pump + 1H/1C Conventional	No	No	Yes
TH4110U2005/U	T4 Pro Thermostat	7-day, 5-2, 5-1-1 or non-programmable"		3.93 sq. in.	1H/1C Heat Pump + 1H/1C Conventional	No	No	Yes
TH3110U2008	T3 Pro Thermostat	Non-programmable		3.79 sq. in.	1H/1C Heat Pump (w/o aux) + 1H/1C Conventional	No	No	No
TH3210U2004	T3 Pro Thermostat	Non-programmable		3.79 sq. in.	2H/1C Heat Pump (w/ aux) + 1H/1C Conventional	No	No	No
TH1110D2009/U	T1 Pro Thermostat	Non-programmable		2.37 sq. in.	1H/1C Heat Pump + 1H/1C Conventional	No	No	No

T6 Hydronic Thermostats

T6 Pro Hydronic Programmable Thermostat can be used to control the ambient air temperature or floor temperature or both. You can choose among the following temperature control modes:

A mode: Controls and displays the ambient air temperature only.
F mode: Controls and displays the floor temperature only using an external floor temperature sensor. This control mode is suitable for areas such as bathrooms where floor temperature could be scheduled to be warm only during occupied, morning and evening periods.
AF mode: Controls and displays the ambient air temperature as well as maintains the floor temperature within desired floor temperature limits using an external floor temperature sensor. Setting the minimum and maximum floor temperature limits is a way to enhance comfort and to protect the floor covering at the same time.

Dimensions Lead Length: 180 in. (4570 mm.) 10 kohm NTC thermistor at 25 C
Programming Options: 7-day, 5-1-1, 5-2, non- programmable
Temperature Sensor Accuracy: ± 1.5 °F at 70 °F (0.85 °C at 21.0 °C)
Clock Accuracy:± 1 minute every month (30 days) at 77°F. ± 2 minutes per month over the operating ambient temperature range.
Physical Dimensions: 4-1/16" H x 4-1/16" W x 1-5/32" D
103.5 mm H x 103.5 mm W x 29 mm D
Display Size: 5.44 sq. in.
Power Requirements: AA alkaline battery 2pcs. And/or
C-wire input: 18-30VAC; 50Hz-60Hz

Selectable Range Stops:
Max Heat:
A/AF mode: 40 to 90 °F (default 90 °F); 4.5 to 32.0 °C (default 32 °C)
F mode: 40 to 99 °F (default 85 °F); 4.5 to 38.0 °C (default 29.5 °C)
Min Heat:
A/AF mode: 40 to 90 °F (default 50 °F); 4.5 to 32.0 °C (default 10 °C)
F mode: 40 to 99 °F (default 50 °F); 4.5 to 38.0 °C (default 10 °C)
Min Floor Temp Limit: 40 to 89 °F (72 °F); 4.5 to 31.5 °C (22.2 °C)
Max Floor Temp Limit: 50 to 99 °F (85 °F); 10 to 38 °C (29.5 °C)

Freeze Protection Temperature:
A Mode: 40 to 50 °F (40 °F); 4.5 to 10.0 °C (4.5 °C)
A/AF Mode: 40 °F (4.5 °C) to Min. Floor Temp. Limit
F Mode: 40 °F (4.5 °C) to Min. Heat Temp. Setpoint
Operating Ambient Temperature: 37 to 102 °F (2.8 to 38.9 °C)
Shipping Temperature: -20 to 120 °F (-28.9 to 48.9 °C)
Operating Relative Humidity: 5% to 90% (non-condensing)
Color: White

Material Number	Description	Program Options	Power Method	Display Size	Stages	External Sensor Available
TH6100AF2004/U	T6 Pro Hydronic Programmable Thermostat can be used to control hot water heat systems by sensing the ambient air temperature, floor temperature, or both. Wired floor sensor included	7-Day, 5-1-1, 5-2, non-programmable	Battery or Hardwired	5.44 sq.in	Up to 1 heat only. Hot water, and steam	Floor Sensor (included)
AC112-01	Radiant slab floor sensor. Thermistor 10k ohm. Works with T10+, THX9421, TH6100, TH114, TH115, AQ, and HP series.					

Prestige® 2-Wire IAQ Thermostat

THX9421R5021WW/U

The Prestige® IAQ thermostat is a 2 wire high definition color touch screen thermostat, 7 day programmable and selectable for residential or light commercial use. Controls up to 4-stages of heat and 2-stages of cool in a heat pump system and up to 3-stages of heat and 2-stages of cool in a conventional system.

- Control heating, cooling and IAQ equipment with only 2 wires at the thermostat. Heating, cooling and IAQ equipment wires to the Equipment Interface Module.
- Smart Schedule - programs in seconds for any lifestyle
- Patented interview based programming and installer setup.
- RedLINK® wireless communication.
- Increase profit per job by including RedLINK accessories that provide comfort and convenience. RedLINK accessories include the RedLINK Internet Gateway, Portable Comfort Control (PCC), Wireless Outdoor Sensor, Wireless Indoor Sensor, Wireless Entry/Exit Remote, Wireless Vent and Filter Boost Remote, and TrueZONE® zoning panel with Wireless Adapter.
- Selectable for residential and light commercial applications. Meets commercial code and is title 24 compliant.
- Light commercial - commercial language (occupied and unoccupied), schedule holidays and custom events, remote setback, economizer and time of day.
- Delta T Alerts and Diagnostics informs customers when their system is not performing as expected with instructions to contact the dealer. Provides a sense of security and greater comfort while generating repeat business.
- All Prestige® IAQ kits come standard with a return and discharge air temperature sensor to measure Delta T.
- Alerts and User Interactions Log - Keeps a searchable history of alerts and setting changes to the thermostat to determine if there is a system malfunction or if the issue was caused by user error. Saves time in troubleshooting and points the technician in the right direction.
- Performance Logs - Keeps a history of heating and cooling performance. The performance log includes Minimum and Maximum Delta T, Minimum and Maximum Discharge Temperature, Minimum and Maximum Return Temperature, Minimum and Maximum Indoor Temperature/Humidity, Minimum and Maximum Outdoor Temperature/Humidity and Run Time. Quickly determine if the system is performing as expected and reduces service time on the job.
- Customizable Service Reminders allow dealers to remind their customers when it's time to call for service, when their warranty is expiring and to provide customized alerts.
- USB port for transferring Installer Setup, Customizable Reminders, Custom Events and Holidays to multiple thermostats.
- USB port for adding the dealer's full color business logo on the screen.
- 3 assignable outputs to control humidification, dehumidification, ventilation and a stage of heating or cooling.
- 4 assignable inputs on the Equipment Interface Module can be used with wired outdoor, indoor or discharge sensors, occupancy sensor for remote setback and dry contact devices to trip pre-packaged or custom alerts such as a full drain pan or water leak.
- Extend wireless range of the Equipment Interface Module by connecting a THM4000R1000 Wireless Adapter to the ABCD terminals.
- Tri-lingual - English, French and Spanish display options.
- Precise temperature control (+/- 1°F) for reliable and consistent temperature.
- Multiple staging options to provide comfort or energy savings.

Applications: Up to 4 Heat/2 Cool Heat Pumps; Up to 3 Heat/2 Cool Conventional Systems
Display Size: 8.06 sq in.
Terminal Designations: R, °C then RedLINK to Equipment Interface Module
Changeover: Auto or Manual
Stages: Up to 4 Heat/2 Cool Heat Pumps; Up to 3 Heat/2 Cool Conventional Systems, See Equipment Interface Module
Programmability: 7-Day Multiple Day Programming or Non-Programmable
Switch Positions (System): HEAT-OFF-COOL-AUTO-EM.HEAT
Switch Positions (Fan): AUTO-ON-CIRC-FOLLOW SCHEDULE
Setting Temperature Range: Heat: 40°F to 90°F; Cool 50°F to 99°F (Heat: 4.5°C to 32.0°C; Cool: 10°C to 37.0°C)
Operating Temperature Range: 32°F to 120°F (0°C to 48.9°C)
Humidification Setting Range: Cooling: 40 to 80% RH. Heating: 10 to 60% RH.
Dehumidification Setting Range: 40 to 80% RH.
Operating Humidity Range (% RH): 5 to 90% RH, non-condensing
Power Method: Hardwired
Supply Voltage: 18 to 30 Vac
Frequency: 50 Hz; 60 Hz
Electrical Connections: Screw terminals
Electrical Ratings: 18 to 30 Vac
Dimensions: 3-1/2 in. High, 4-1/2 in. Wide, 7/8 in. Deep (88 mm. High, 115 mm. Wide, 22 mm. Deep)
External Sensors Available: N/A
Comments: Tri-Lingual Display (selectable for English, French or Spanish)

Wireless Technology

Accessories:
THP2400A1027B/U – Black Coverplate assembly for use with the Prestige® 2-Wire IAQ Thermostat
YTHM5421R1010/U – Prestige® 2-Wire IAQ Equipment Interface Module Kit with 2 Duct Sensors
THM5421R1021/U – Prestige® 2-Wire IAQ Equipment Interface Module
THM6000R7001/U – RedLINK Internet Gateway
THM4000R1000/U – Wireless Adapter for use with RedLINK enabled thermostats and TrueZONE™ system
REM5000R1001/U – Portable Comfort Control
REM1000R1003/U – RedLINK Wireless Entry/Exit Remote
HVC20A1000/U – Wireless Vent and Filter Boost Remote
C7089R1013/U – Senses outdoor temperature and humidity
C7189R1004/U – Wireless Indoor Air Sensor. RedLINK enabled. Senses indoor temperature and humidity

Material Number	Color	Includes	Used With
THX9421R5021WW/U	Front: White, Side: White		THM5421R1021 Equipment Interface Module and RedLINK accessories
YTHX9421R5085WW/U	Front: White, Side: White	THX9421R5021WW Prestige® 2-Wire IAQ Thermostat, THM5421R1021 Equipment Interface Module and 2 Duct Sensors	RedLINK accessories
YTHX9421R5101WW/U	Front: White, Side: White	THX9421R5021WW Prestige® 2-Wire IAQ Thermostat, THM5421R1021 Equipment Interface Module, C7089R1013 Wireless Outdoor Sensor and 2 Duct Sensors	RedLINK accessories
YTHX9421R5127WW/U	Front: White, Side: White	THX9421R5021WW Prestige® 2-Wire IAQ Thermostat, THM5421R1021 Equipment Interface Module, THM6000R7001 RedLINK Internet Gateway and 2 Duct Sensors	RedLINK accessories

VisionPRO® 8000 with RedLINK® technology

VisionPRO® 8000 with RedLINK® technology is a touchscreen thermostat, 7 day programmable and selectable for residential or light commercial use. Controls up to 3-stages of heat and 2-stages of cool in a heat pump system and up to 2-stages of heat and 2-stages of cool in a conventional system.

- Thermostat works standalone or with the THM5421R1021 Equipment Interface Module or with the TrueZONE Wireless Adapter.
- Smart Schedule - programs in seconds for any lifestyle.
- Patented interview based programming and installer setup.
- RedLINK wireless communication.
- Increase profit per job by including RedLINK accessories that provide comfort and convenience. RedLINK accessories include the RedLINK Internet Gateway, Portable Comfort Control (PCC), Wireless Outdoor Sensor, Wireless Indoor Sensor, Wireless Entry/Exit Remote, Wireless Vent and Filter Boost Remote, and TrueZONE® zoning panel with Wireless Adapter.
- Selectable for residential and light commercial applications. Meets commercial code and is title 24 compliant.
- Light commercial - commercial language (occupied and unoccupied), schedule holidays and custom events, remote setback, economizer and time of day. Remote Setback requires the THM5421R1021 Equipment Interface Module.
- Plain language setup, no manual needed.

Applications: Up to 1 Heat/1 Cool heat pump or up to 1 Heat/1 Cool conventional
Display Size: 10 sq in.
Color: Arctic White
Changeover: Auto or Manual
Stages: Up to 4 Heat / 2 Cool Heat Pump or Up to 3 Heat / 2 Cool Conventional when used with the Equipment Interface Module.
Programmability: 7-Day Multiple Day Programming or Non-Programmable
Switch Positions (System): HEAT-OFF-COOL-AUTO
Switch Positions (Fan): AUTO-ON-CIRC-FOLLOW SCHEDULE
Setting Temperature Range: Heat: 40°F to 90°F; Cool 50°F to 99°F (Heat: 4.5°C to 32.0°C; Cool: 10°C to 37.0°C)
Operating Temperature Range: 32°F to 120°F (0°C to 48.9°C)
Operating Humidity Range (% RH): 5 to 90% RH, non-condensing
Power Method: Battery or Hardwired (must be battery powered when used on a millivolt system)
Supply Voltage: 18 to 30 Vac
Frequency: 50 Hz; 60 Hz
Electrical Connections: Screw terminals
Electrical Ratings: 18 to 30 Vac or 750 mV
Dimensions: 4-5/8 in. High, 4-15/16 in. Wide, 1-1/8 in. Deep (118 mm. High, 126 mm. Wide, 29 mm. Deep)
Used With: Works standalone or with optional THM5421R1021 Equipment Interface Module and RedLINK accessories

- Alerts and User Interactions Log - Keeps a searchable history of alerts and setting changes to the thermostat to determine if there is a system malfunction or if the issue was caused by a user error. Saves time in troubleshooting and points the technician in the right direction. The Alert and User Interaction Logs are viewable on a computer after you download them from the thermostat to a microSD card.
- Customizable Service Reminders allow dealers to remind their customers when it's time to call for service, when their warranty is expiring and to provide customized alerts.
- MicroSD port for copying the Installer Setup, Customizable Reminders, Custom Events and Holidays to multiple thermostats.
- MicroSD port for adding the dealer's contact information on the screen.
- 1 assignable output on the TH8321 model to control humidification, dehumidification, ventilation or a stage of heating/cooling.
- 3 assignable outputs on the Equipment Interface Module to control humidification, dehumidification, ventilation or a stage of heating/cooling. The TH8110 and TH8320 models require the use of a Wireless Indoor Sensor to control humidification and dehumidification.
- 1 assignable input can be used with a wired outdoor, indoor or discharge sensor.
- 4 assignable inputs on the Equipment Interface Module can be used with wired outdoor, indoor or discharge sensors, occupancy sensor for remote setback and dry contact devices to trip pre-packaged or custom alerts such as a full drain pan or water leak.
- Extend wireless range of the Equipment Interface Module by connecting a THM4000R1000 Wireless Adapter to the ABCD terminals.
- Dual powered - battery or hardwired (C wire).
- Precise temperature control (+/- 1°F) for reliable and consistent temperature.
- Multiple staging options to provide comfort or energy savings.

RED LINK®
Wireless Technology

Accessories:
THM5421R1021/U – Equipment Interface Module
THM6000R7001/U – RedLINK Internet Gateway
THM4000R1000/U – Wireless Adapter for use with RedLINK enabled thermostats and TrueZONE™ system
REM1000R1003/U – RedLINK Wireless Entry/Exit Remote
HVC20A1000/U – Wireless Vent and Filter Boost Remote
C7089R1013/U – Senses outdoor temperature and humidity
C7189R1004/U – Wireless Indoor Air Sensor. RedLINK enabled. Senses indoor temperature and humidity
THP2400A1019/U – Coverplate assembly for use with the RedLINK VisionPRO®
REM5000R1001/U – Portable Comfort Control

Material Number	Terminal Designations	Stages (when used standalone)	Humidification Setting Range	Dehumidification Setting Range	Includes
TH8110R1008/U	R, RC, C, W-O/B, Y, G, K, S1 S1	Up to 1 Heat / 1 Cool Heat Pump or Up to 1 Heat / 1 Cool Conventional			VisionPRO® 8000 thermostat
TH8320R1003/U	R, RC, C, W-O/B, W2-AUX/E, Y, Y2, G, A-L/A, K, S1 S1	Up to 3 Heat / 2 Cool Heat Pump or Up to 2 Heat / 2 Cool Conventional			VisionPRO® 8000 thermostat
TH8321R1001/U	R, RC, C, W-O/B, W2-AUX/E, Y, Y2, G, A-L/A, K, U1 U1, S1 S1	Up to 3 Heat / 2 Cool Heat Pump or Up to 2 Heat / 2 Cool Conventional	Cooling: 40 to 80% RH. Heating: 10 to 60% RH.	40 to 80% RH.	VisionPRO® 8000 thermostat
YTH8321R1002/U	R, RC, C, W-O/B, W2-AUX/E, Y, Y2, G, A-L/A, K, U1 U1, S1 S1	Up to 3 Heat / 2 Cool Heat Pump or Up to 2 Heat / 2 Cool Conventional	Cooling: 40 to 80% RH. Heating: 10 to 60% RH.	40 to 80% RH.	TH8321R1001 VisionPRO® 8000 thermostat and THM6000R7001/U RedLINK Internet Gateway

THM5421 Prestige® 2-Wire IAQ Comfort System Equipment Interface Module

THM5421 Equipment Interface Module for Prestige® IAQ and VisionPRO® 8000 with RedLINK®. Equipment Interface Module controls up to 4-stages of heat and 2-stages of cool in a heat pump system and up to 3-stages of heat and 2-stages of cool in a conventional system. Three sets of Universal IAQ contacts to control humidification, dehumidification, and ventilation. Four sensor inputs for wired sensors or dry contact devices.

Applications: Gas, oil, electric, heat pump, forced warm air, hot water, steam or gravity
Mounting: Vertical
Color: Gray
Operating Temperature Range: -40°F to 165°F (-40°C to 73.9°C)
Operating Humidity Range (% RH): 5 to 95% RH, non-condensing
Power Method: Hardwired
Supply Voltage: 18 to 30 Vac
Frequency: 50 Hz; 60 Hz
Electrical Connections: Screw terminals
Electrical Ratings: 18 to 30 Vac

Dimensions: 9-5/16 in. High, 4-13/16 in. Wide, 1-5/8 in. Deep (237.4 mm High, 122.5 mm Wide, 40.6 mm Deep)
Cool Current: 1.0 A running
Heat Current: 1.0 A running
Fan Current: 0.5A running

RED LINK Wireless Technology

Material Number	Terminal Designations	Stages	Includes	Used With
THM5421R1021/U	R, RC, RH, C, W-O/B, W2-AUX1, W3-AUX2, Y, Y2, G, A-L/A, U1, U1, U2, U2, U3, U3, S1, S1, S2, S2, S3, S3, S4, S4, A, B, C, D	Up to 4 Heat / 2 Cool Heat Pump or Up to 3 Heat / 2 Cool Conventional	THM5421R1021 Equipment Interface Module	All Prestige® IAQ Thermostats and the VisionPRO® Thermostats with RedLINK technology.
YTHM5421R1010/U	R, RC, RH, C, W-O/B, W2-AUX1, W3-AUX2, Y, Y2, G, A-L/A, U1, U1, U2, U2, U3, U3, S1, S1, S2, S2, S3, S3, S4, S4, A, B, C, D	Up to 4 Heat / 2 Cool Heat Pump or Up to 3 Heat / 2 Cool Conventional	THM5421R1021 Equipment Interface Module and 2 Duct Sensors	All Prestige® IAQ Thermostats and the VisionPRO® Thermostats with RedLINK technology.

ERM5220R Equipment Remote Module

ERM5220R Equipment Remote Module provides wireless RedLINK communication between condensing unit/compressor or boiler and thermostat. Use it whenever it's too costly or time-consuming to run wires from a condensing unit or boiler to control devices. Suitable for outdoor use. Temperature sensor terminals for outdoor temp sensors or indoor freeze protection. LEDs for easy installation checkout.

Applications: Gas, oil, electric, heat pump, forced warm air, hot water, steam or gravity
Mounting: Vertical
Color: Gray
Operating Temperature Range:
Compressor: -40°F to +155°F (-40°C to +68°C)
Boiler: 30°F to +130°F (-1°C to +54°C)
Operating Humidity Range (% RH): 5 to 99% RH, non-condensing
Power Method: Hardwired
Supply Voltage: 24 Vac
Frequency: 50 Hz; 60 Hz

Electrical Connections: Screw terminals
Electrical Ratings: 24 Vac
Dimensions: 6-39/64 in. High, 6-7/8 in. Wide, 1-31/64 in. Deep 168 mm High, 175 mm Wide, 38 mm Deep

RED LINK Wireless Technology

Material Number	Terminal Designations	Stages	Includes	Used With
ERM5220R1018	J, R, C, Y, Y2, O/B, D, L, S1, S1	Up to 2 Heat / 2 Cool Heat Pump or Up to 2 Stage Conventional	ERM5220R Equipment Remote Module	THX9421R5021, TH8321R1001 and EIM (when EIM is required).
YERM5220R8321	ERM-J, R, C, Y, Y2, O/B, D, L, S1, S1	Up to 2 Heat / 2 Cool Heat Pump or Up to 2 Stage Conventional	ERM5220R1018 Equipment Remote Module and TH8321R1001 VisionPRO 8000	
YERM5220RVPEIM	ERM-J, R, C, Y, Y2, O/B, D, L, S1, S1	Up to 2 Heat / 2 Cool Heat Pump or Up to 2 Stage Conventional	ERM5220R1018 Equipment Remote Module, TH8321R1001 VisionPRO 8000, and THM5421R1021 Equimpent Interface Module	

RedLINK Internet Gateway

The RedLINK® Internet Gateway provides remote access to Prestige, RedLINK 8000, or RedLINK FocusPRO thermostats through the internet, smartphone or tablet.

- RedLINK enabled to communicate with compatible wireless devices.
- Control any Prestige, RedLINK 8000, or RedLINK FocusPRO thermostat.
- 3 foot ethernet cable included.
- Simple installation to home or business router.
- Easily change system modes and indoor temperature through the web portal or mobile app.
- Multiple HOLD options allows modification of schedule as needed.
- High/Low temperature and humidity messaging alerts the user when the indoor conditions are too high or too low.
- Will accept a maximum of 4 thermostats on one single Gateway.

Applications: Internet control of RedLINK thermostats; Up to 4 Heat/ 2 Cool Heat Pumps
Color: Black
Operating Temperature Range: 32°F to 120°F (0°C to 48.9°C)
Operating Humidity Range (% RH): 5 to 90% RH, non-condensing
Power Method: A 5 Vdc, 1000 mA power adapter

Electrical Connections: 24 Volt Plug In Transformer
Electrical Ratings: 20 to 30 Vac
Dimensions: Unit: 5 in. tall x 5-1/2 in. wide x 1-3/8 in. deep; Foot base: 6 in. x 2 1/2 in. (Unit: 127 mm tall x 140 mm wide x 35 mm deep; Foot base: 152 mm x 64 mm)

Material Number	Description	Used With	Includes
THM6000R7001/U	RedLINK Internet Gateway	Prestige, RedLINK 8000, or RedLINK FocusPRO thermostats and accessories	3 Foot Ethernet Cable and Plug in Power Adapter

C7089 Wireless Outdoor Sensor

Senses outdoor temperature and humidity to display on Prestige, RedLINK 8000, or RedLINK FocusPRO thermostats and accessories.

- Powered by RedLINK reliability
- No interference with other wireless devices in the home
- Reliable performance in all climates
- Installs in minutes
- Up to 5 year battery life
- 2 month low battery warning
- Battery warning displayed on RedLINK® enabled thermostats
- Includes 2 AA Lithium batteries and mounting hardware

Applications: Outdoor Sensor
Mounting: Vertical mounting with supplied bracket and mounting hardware
Color: Gray
Operating Temperature Range: -40°F to 140°F (-40°C to +60°C)
Operating Humidity Range (% RH): 0 to 100% RH, condensing

Power Method: Battery
Dimensions:
with mounting bracket) 5 in. high x 3-1/2 in. wide x 1-11/16 in. deep ([with mounting bracket] 127 mm high x 89 mm wide x 43 mm deep)
Sensor Element: Thermistor

Material Number	Comments	Used With	Includes
C7089R1013/U	Wireless Outdoor Sensor is also available in kits	Prestige, RedLINK 8000, or RedLINK FocusPRO thermostats and accessories	2 AA Lithium Batteries and mounting hardware

C7189 Wireless Indoor Air Sensor

The Remote Indoor Sensor works with select RedLINK® enabled thermostats.

- Used to sense temperature if the thermostat is installed in a poor temperature sensing location.
- Small remote temperature sensor to match any room decor.
- Easy to install and use.
- Factory calibrated; no field calibration required.

Applications: Wireless Indoor Air Sensor
Mounting: Mounts on a vertical wall with supplied bracket and mounting hardware
Color: Arctic White
Operating Temperature Range: 0°F to 120°F (35°F to 114°F for optimal battery life) -17.8°C to 48.9°C (1.7°C to 45.6°C for optimal battery life)
Operating Humidity Range (% RH): 5 to 90% RH, non-condensing
Power Method: Battery
Dimensions: 2-7/8 in. high x 1-7/8 in. wide x 15/16 in. deep (73 mm high x 48 mm wide x 24 mm deep)

Material Number	Description	Used With	Includes
C7189R1004/U	Senses indoor temperature and humidity for control with select RedLINK thermostats	Redesigned Prestige IAQ, Prestige IAQ 2.0, Prestige 2.0, All New RedLINK VisionPRO 8000	2 AAA alkaline batteries and mounting hardware

REM1000 RedLINK Wireless Entry/Exit Remote

Applications: Heating and Cooling systems, RedLINK Thermostat Accessory
Color: White
Operating Temperature Range: 35°F to 114°F for optimal battery life (1.7°C to 45.6°C for optimal battery life)
Operating Humidity Range (% RH): 5 to 90% RH, non-condensing
Power Method: Battery, Lithium Coin Cell
Dimensions: 6 1/4 in. high x 3 1/8 in. wide x 1 5/8 in. deep (159 mm high x 79 mm wide x 41 mm deep)
Sensor Element: Thermistor
Used With: select RedLINK enabled thermostats and accessories

Material Number	Description	Used With
REM1000R1003/U	RedLINK Wireless Entry/Exit Remote	Redesigned Prestige IAQ, Prestige IAQ 2.0, Prestige 2.0, All New RedLINK VisionPRO 8000

REM5000 Portable Comfort Control

Use the Portable Comfort Control anywhere in the home to experience a new level of comfort and convenience. Works in both zoned and non-zoned applications.

- Powered by RedLINK® reliability
- No interference with other wireless devices in the home
- Works with Prestige, RedLINK VisionPRO® 8000, and RedLINK FocusPRO thermostat models
- Installs in minutes
- Touchscreen interface with backlit display
- Can display outdoor temperature and humidity
- Built-in pager with an audible noise helps locate the device in the home
- Screen-lock feature helps prevent accidental changes
- 1 year battery life
- 2 month low battery warning
- In Non-Zoned Applications: Bring it with you anywhere in the home to sense and control temperature from the room that you are in
- In Zoned Applications: View and adjust all RedLINK enabled thermostats from a single control
- Controls up to 16 thermostats

Applications: Zoned and Non-Zoned Applications
Changeover: Auto or Manual
Differential Temperature: ± 1°F (±0.5°C)
Operating Temperature Range: 32°F to 120°F (0°C to 48.9°C)
Operating Humidity Range (% RH): 5 to 90% RH, non-condensing
Power Method: Battery

Dimensions: 6 1/4 in. high x 3 1/8 in. wide x 1 5/8 in. deep (159 mm high x 79 mm wide x 41 mm deep)
Sensor Element: Thermistor
Used With: Prestige, RedLINK VisionPRO® 8000, and RedLINK FocusPRO thermostat models
Comments: Portable Comfort Control is also available in kits.

Material Number	Description
REM5000R1001/U	Use the Personal Comfort Station™ anywhere in the home to experience a new level of comfort and convenience. Works in both zoned and non-zoned applications.

Wireless Adapter

Wireless Adapters allow easy addition of Prestige, RedLINK 8000, or RedLINK FocusPRO thermostats to TrueZONE™ systems. Also used to increase RedLINK signal range of the THM5421R1021 EIM.

- Powered by RedLINK reliability.
- No interference with other wireless devices in the home.
- Communicates with Wireless Outdoor Sensor to automatically control humidity.

Terminal Designations: A, B, C, D
Mounting: Mount Wireless Adapter on wall near HVAC equipment or on the duct.
Color: Gray
Operating Temperature Range: -40°F to 165°F (-40°C to 73.9°C)

Operating Humidity Range (% RH): 5 to 95% RH, non-condensing
Dimensions: 5-9/16 in. high x 4-3/8 in. wide x 1-1/4 in. deep (141 mm high x 112 mm wide x 32 mm deep)
Operation: One adapter per zone control panel, HZ322 or HZ432 TrueZONE panel

Material Number	Description
THM4000R1000/U	Wireless Adapter allows you to easily add RedLINK enabled thermostats to a TrueZONE™ system without running new wires.

LineVoltPRO® 8000 7-Day Programmable Hydronic Thermostat

The TL8100 Hydronic Thermostat offers the energy savings of a programmable control for a wide variety of applications without a need to carry multiple thermostats for different applications. Controls 2-way and 3-way zone valves or circulator pumps.

Applications: Central Heating (Conventional); Baseboards; Convectors; Fan-forced Heaters; Radiant Ceilings
Mounting: Vertical
Color: White
Programmability: 7-Day Program
Setting Temperature Range: 40°F to 85°F (5°C to 30°C)
Differential Temperature: 0.1°F (0.1°C)
Operating Temperature Range: 32°F to 122°F (0°C to 50°C)
Operating Humidity Range (% RH): 0% to 95%, non-condensing
Power Method: 2 AA (LR6) batteries
Supply Voltage: 24 Vac; 30 Vdc; 120 Vac; 240 Vac
Electrical Connections: Screw terminals
Electrical Ratings: Maximum Load: 5 A (resistive), 2 A (inductive) @ 24 Vac, 120 Vac, 240 Vac; Compatible with millivolt systems
Dimensions: 4.9 in. X 3.8 in. X 1 in. (126 mm X 97 mm X 26 mm)
Sensor Element: Thermistor
Switch Type: Relay
Approvals, Underwriters Laboratories Inc.: Approved

Material Number	Description	Stages	Accuracy	Terminal Designations	Comments	Used With
TL8100A1008/U	TL8100A1008 - Multi-Application 7-Day Programmable Electronic Thermostat	1 Heat	0.5°C	R, W, (X, C, optional remote input)	Pump Protection (for hot water heating)	Aube CT240-01 Telephone Controller

Hydronic Pro Zoning System

Zoning is an ideal way to help your customers maximize comfort while enjoying energy savings, but zoning for homes with a central boiler has been time consuming—until now. Hydronic Zoning Panels feature simplified setup and wiring for quick installation. You'll be able to offer your hydronic customers the many benefits of zoning easier than ever before.

- **Familiar Setup** – If you know how to install an existing panel, you can install ours too. We offer the same board layout and matching functionality as competitive products
- **Status Panel** – LED panel is visible and functional whether the cover is on or off which gives the installer the ability to quickly troubleshoot the system saving time and effort
- **Flex Panel Mounting** – Gravity centered hang hole makes quick work of mounting. Optional DIN rail mounting system included to further simplify professional mounting
- **Hinged Door and Quarter Turn Access Screw** – Quarter-turn access and hinge off front cover make access quick and easy while still providing safety
- **Simple Layout Cover** – Control board is covered to reduce visual clutter and provide a surface on which to print full color terminal labels. Easy-to-understand labels coded to wire colors will increase installation speed and decrease errors
- **5 Year Warranty**

Part Number	Descrption	Zones	Transformers	Input Power	Priority Zone Control	Type 1 Enclosure		
						Width	Height	Depth
HPSR101/U	Single Zone Switching Relay	1	(1) 24V 15VA	120VAC, 60Hz, 1	Yes	5-1/8"	6-3/4"	2-3/8"
HPSR103/U	Three Zone Switching Relay	3	(1) 24V 15VA	120VAC, 60Hz, 1	Yes	11-3/4"	8-3/4"	2-1/8"
HPSR104/U	Four Zone Switching Relay	4	(1) 24V 15VA	120VAC, 60Hz, 1	Yes	11-3/4"	8-3/4"	2-1/8"
HPSR106/U	Six Zone Switching Relay	6	(1) 24V 15VA	120VAC, 60Hz, 1	Yes	11-3/4"	8-3/4"	2-1/8"
HPZC103/U	Three Zone Valve Controller	3	(1) 24V 40VA	120VAC, 60Hz, 1	Yes	10-1/4"	7-1/2"	2-1/8"
HPZC104/U	Four Zone Valve Controller	4	(1) 24V 40VA	120VAC, 60Hz, 1	Yes	10-1/4"	7-1/2"	2-1/8"
HPZC105/U	Five Zone Valve Controller	5	(2) 24V 40VA	120VAC, 60Hz, 1	Yes	11-3/4"	7-1/2"	2-1/8"
HPZC106/U	Six Zone Valve Controller	6	(2) 24V 40VA	120VAC, 60Hz, 1	Yes	11-3/4"	7-1/2"	2-1/8"

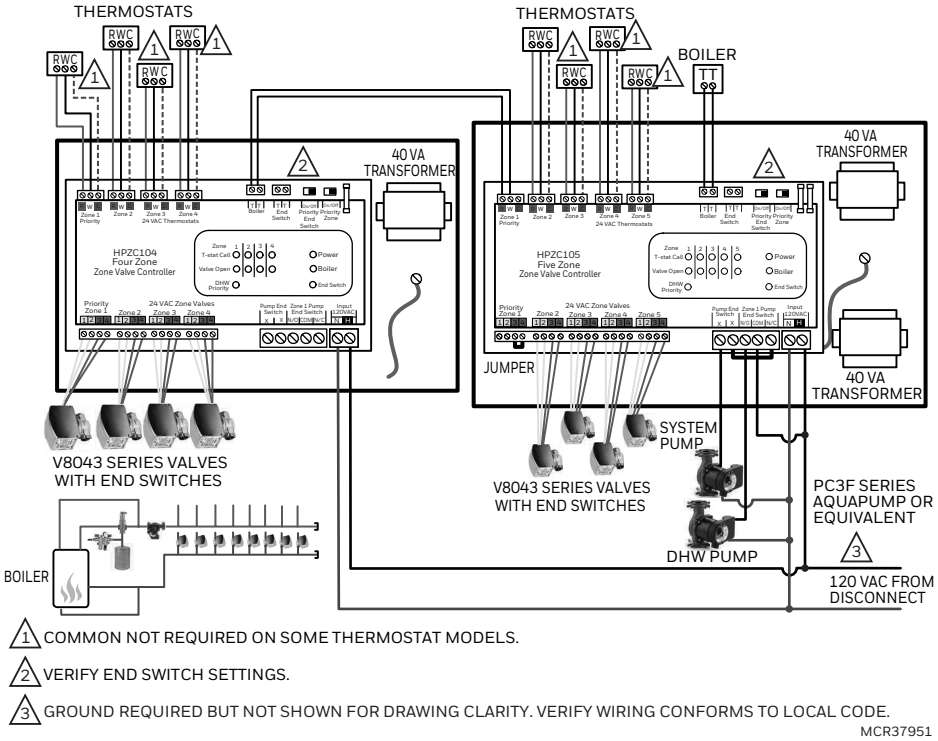

More than 6 zone valves when either the boiler doesn't control DHW or DHW priority is not desired.

NOTE: If more than 8 total zones are needed, multiple HPZC105 (5 zone) or HPZC106 (6 zone) panels can be used. The wiring is the same as shown here except there are additional zone connections. One of the zones is used for panel communication.

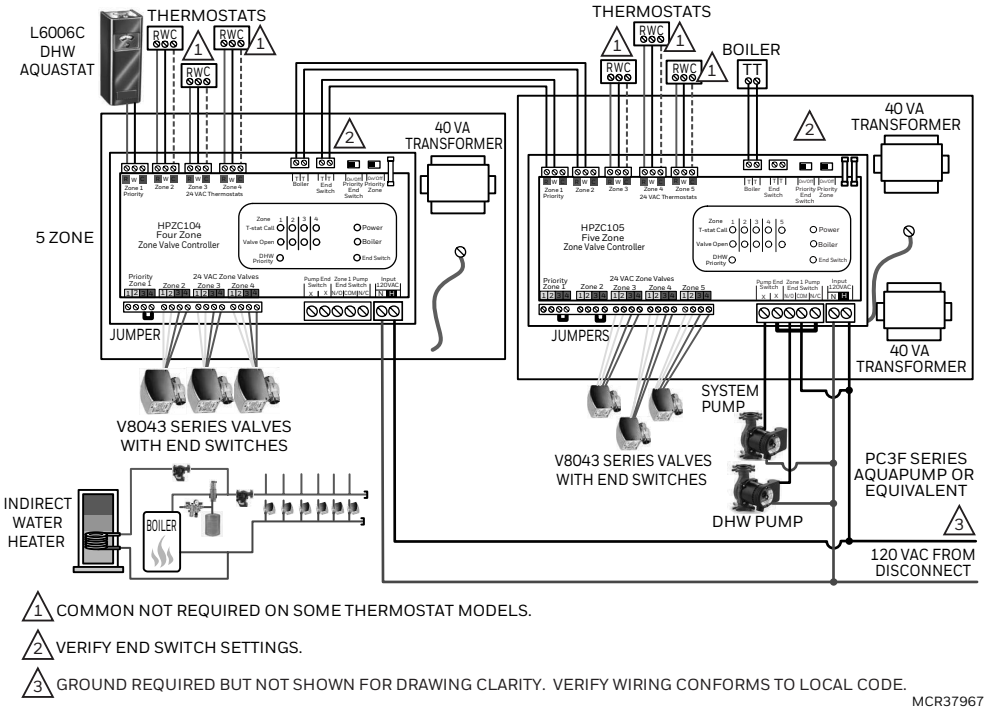

More than 6 zone valves when DHW priority is desired. (DHW is considered one of the zones).

NOTE: If more than 7 total zones are needed, multiple HPZC105 (5 zone) or HPZC106 (6 zone) panels can be used. The wiring is the same as shown here except there are additional zone connections. Two of the zones are used for panel communication.

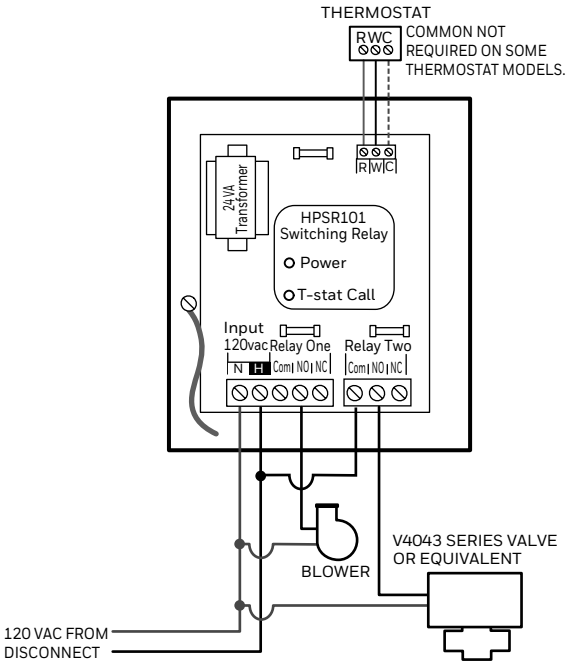

NOTES: GROUND REQUIRED BUT NOT SHOWN FOR DRAWING CLARITY. VERIFY WIRING CONFORMS TO LOCAL CODE.

INSTALLER MUST VERIFY THE FOLLOWING:
1. BLOWER MOTOR IS POWERED BY 120 VOLTS
2. ZONE VALVE IS POWERED BY 120 VOLTS

MCR37968

HPSR101 Switching Relay with 120 volt valve and blower fan.

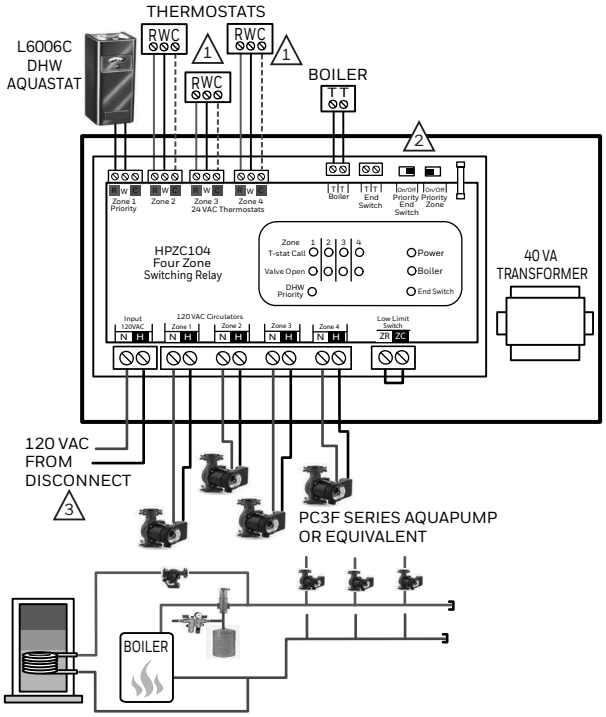

1 COMMON NOT REQUIRED ON SOME THERMOSTAT MODELS.

2 NOTE DIPSWITCH SETTINGS.

3 GROUND REQUIRED BUT NOT SHOWN FOR DRAWING CLARITY. VERIFY WIRING CONFORMS TO LOCAL CODE.

MCR37969

Zoning with pumps and DHW priority.

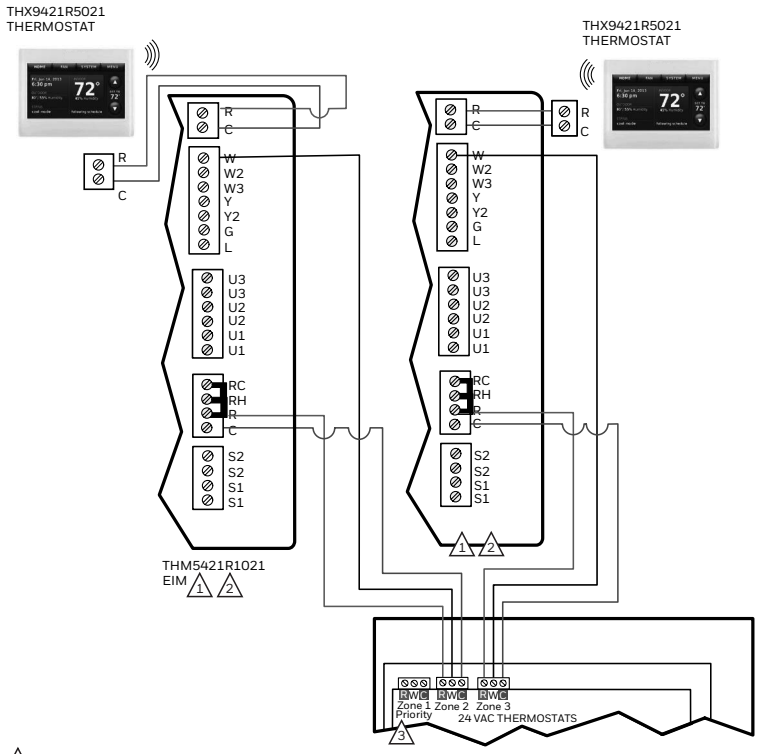

1 A SEPARATE THX9421R5021 THERMOSTAT AND THM5421R1021 EIM ARE NEEDED. THE THERMOSTAT AND EIM ARE SOLD TOGETHER IN THE YTHX9421R5085 KIT.

2 THE EIMS GET MOUNTED ON A WALL IN THE UTILITY ROOM WITH THE HYDRONIC PANEL. TO ENSURE WIRELESS COMMUNICATING RELIABILITY, WE RECOMMEND THE EIMS BE SPACED AT LEAST 2 FEET APART.

3 THE EIM WIRING IS THE SAME FOR ALL THE HPZ AND HSR HYDRONIC PANELS. FOR WIRING OF THE VALVES, PUMPS, POWER, ETC. SEE THE OTHER DIAGRAMS IN THIS FILE OR THE LITERATURE PACKED WITH THE PANEL.

MCR37970

Prestige thermostats with Hydronic panels.

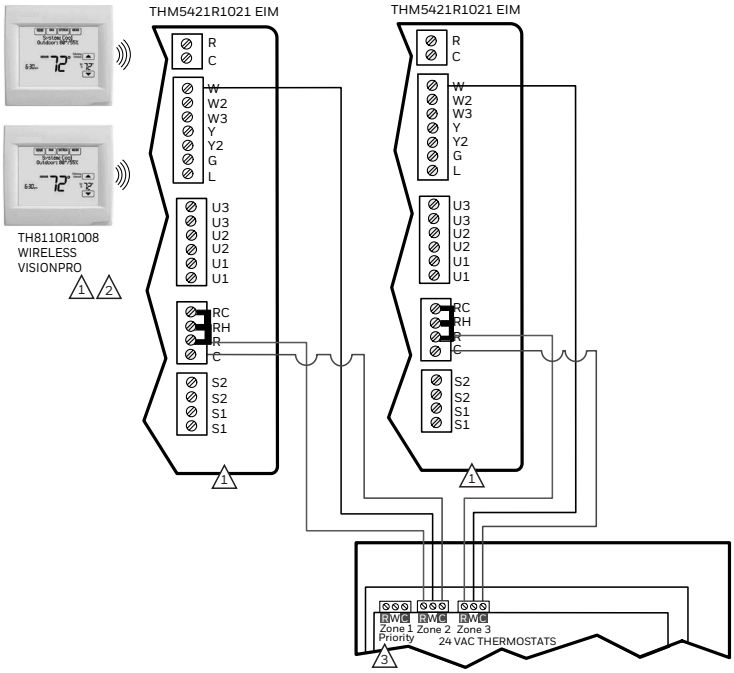

1 A SEPARATE TH8110R1008 THERMOSTAT AND THM5421R1021 EIM ARE NEEDED FOR EACH WIRELESS ZONE. THE EIMS GET MOUNTED ON A WALL IN THE UTILITY ROOM WITH THE HYDRONIC PANEL. TO ENSURE WIRELESS COMMUNICATING RELIABILITY, WE RECOMMEND THE EIMS BE SPACED AT LEAST TWO FEET APART.

2 THE TH8110R THERMOSTATS CAN BE COMPLETELY WIRELESS AND POWERED BY FOUR AA ALKALINE BATTERIES, HOWEVER IF THERE ARE TWO WIRES AVAILABLE AT THE THERMOSTAT YOU CAN WIRE THOSE TO R AND C ON A TRANSFORMER OR ON THE R AND C AT THE TOP OF THE EIM.

3 FOR WIRING OF THE VALVES, PUMPS, POWER, DOMESTIC HOT WATER (IF USED), ETC. SEE THE OTHER DIAGRAMS IN THIS FILE OR THE LITERATURE PACKED WITH THE PANEL.

MCR37971

Wireless VisionPRO thermostats with Hydronic panels.

Hydronic Zoning System

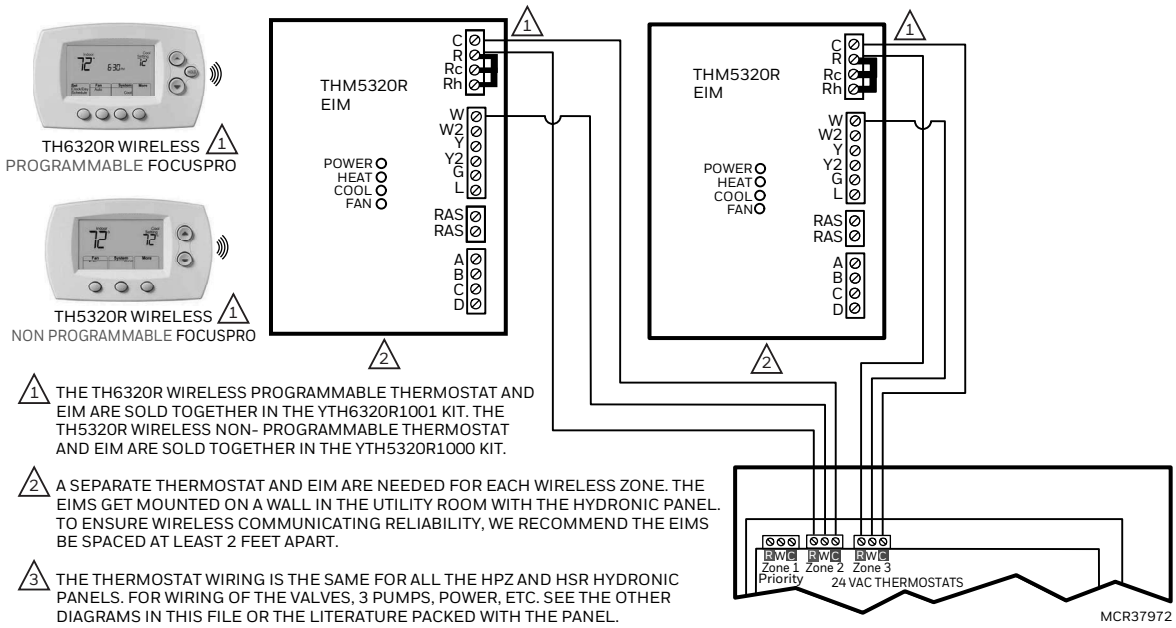

1 THE TH6320R WIRELESS PROGRAMMABLE THERMOSTAT AND EIM ARE SOLD TOGETHER IN THE YTH6320R1001 KIT. THE TH5320R WIRELESS NON- PROGRAMMABLE THERMOSTAT AND EIM ARE SOLD TOGETHER IN THE YTH5320R1000 KIT.

2 A SEPARATE THERMOSTAT AND EIM ARE NEEDED FOR EACH WIRELESS ZONE. THE EIMS GET MOUNTED ON A WALL IN THE UTILITY ROOM WITH THE HYDRONIC PANEL. TO ENSURE WIRELESS COMMUNICATING RELIABILITY, WE RECOMMEND THE EIMS BE SPACED AT LEAST 2 FEET APART.

3 THE THERMOSTAT WIRING IS THE SAME FOR ALL THE HPZ AND HSR HYDRONIC PANELS. FOR WIRING OF THE VALVES, 3 PUMPS, POWER, ETC. SEE THE OTHER DIAGRAMS IN THIS FILE OR THE LITERATURE PACKED WITH THE PANEL.

Wireless FocusPRO thermostats with Hydronic panels.

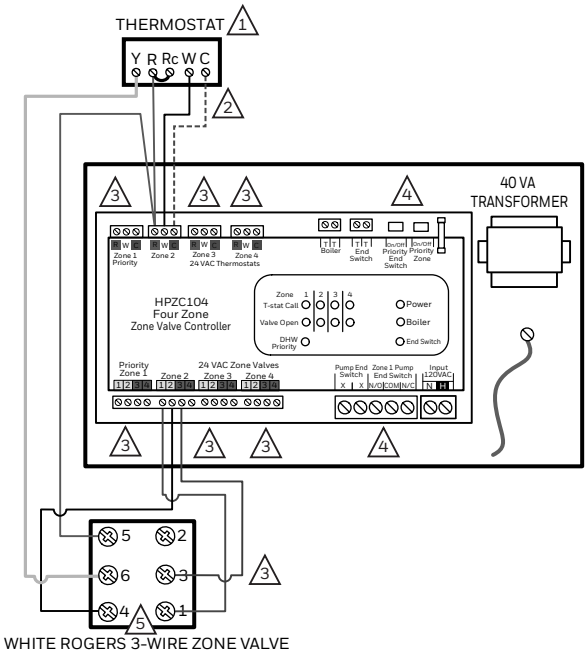

1 THERE ARE MANY HONEYWELL HOME THERMOSTATS THAT SUPPORT SERIES 20, POWER-OPEN/POWER-CLOSED ZONE VALVES. SOME SELECT MODELS LISTED BELOW.

WIFI	PROGRAMMABLE
TH8321WF1001	TH8110R1008
TH6320WF2003	TH6320U2008
TH6220WF2006	TH6220U2000
	TH6210U2001
	TH4210U2002
	TH4110U2005

NON-PROGRAMMABLE
TH1110D2009 (THE TH1010 MODEL OF T1 DOES NOT SUPPORT THIS)

2 COMMON IS OPTIONAL ON NON-WIFI MODELS.

3 THIS DIAGRAM SHOWS THE WIRING ON ZONE 2 BECAUSE IN SOME CASES ZONE 1 IS CONTROLLING DHW. ALL ZONES CONTROLLED BY THERMOSTATS ARE WIRED THE SAME AS ZONE 2 (SHOWN).

4 THIS DIAGRAM IS SPECIFIC TO THE SERIES 20 ZONE VALVE WIRING ON THE HPZC PANELS. WIRING OF THE PUMPS, DHW ZONE (IF USED), AS WELL AS DIPSWITCH SETTINGS VARY BY SYSTEM. SEE THE OTHER DIAGRAMS IN THIS FILE OR THE LITERATURE THAT COMES WITH THE HYDRONIC PANEL FOR WIRING OF THE REST OF THE SYSTEM.

5 VALVE WIRING (AS SHOWN IN DIAGRAM)
- R FROM ZONE CONNECTION AT TOP OF HPZ PANEL TO 5 AT VALVE
- Y FROM THERMOSTAT TO 6 ON VALVE
- 1 FROM ZONE CONNECTION AT BOTTOM OF HPZ PANEL TO 1 ON VALVE
- 2 FROM ZONE CONNECTION AT BOTTOM OF HPZ PANEL TO 4 ON VALVE
- 3 FROM BOTTOM OF HPZ TO 3 ON VALVE

MCR37973

3-Wire, Power-open/Power-closed (series 20) valves used with HPZC panels.

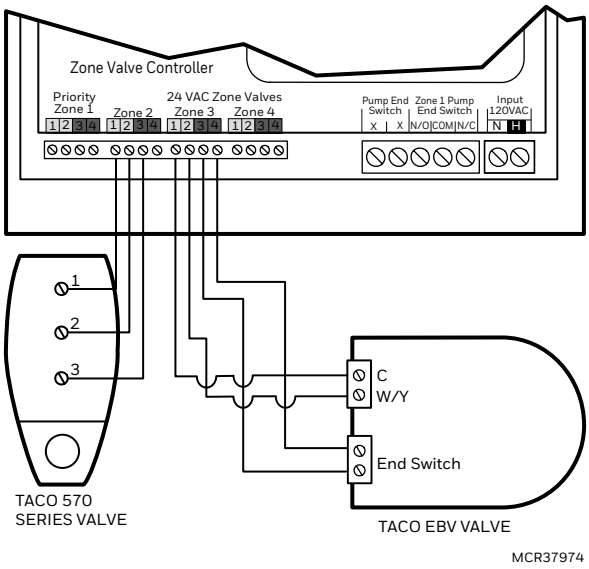

Taco Zone valves with HPZC Hydronic Panels.

NOTE: This diagram is specific to how Taco valves can wire to an HPZC zone valve panel. All zones other than an optional Domestic Hot Water zone are wired the same. See other diagrams in this file for options on pump and line voltage wiring, using multiple panels for systems over 6 zones, DHW priority, etc.

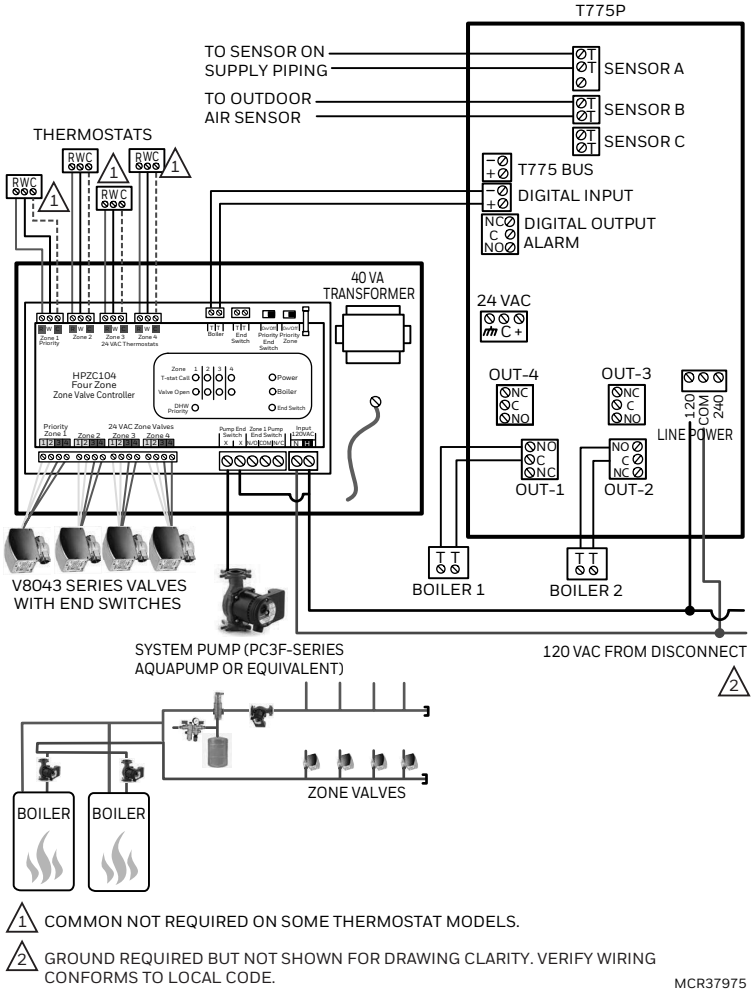

T775P used with Hydronic panels for outdoor reset, and/or staging two boilers.

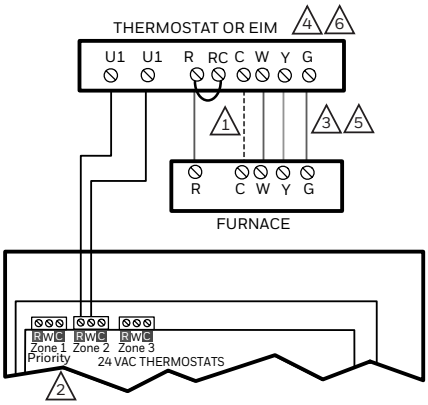

1 COMMON WIRE IS OPTIONAL ON MOST NON-WIFI MODELS. IF COOLING IS NOT USED, DISREGARD THE Y AND G WIRES.

2 THIS DIAGRAM SHOWS HOW THE THERMOSTAT OPTIONS LISTED BELOW CAN BE INTEGRATED TO A HYDRONIC PANEL FOR STAGE 1 HEAT AND A DIFFERENT HEAT SOURCE FOR BACKUP HEAT. THE DIAGRAM DOES NOT SHOW WIRING FOR THE BOILER, PUMP(S), VALVES, DHW CIRCUIT, ETC. SEE OTHER DIAGRAMS IN THIS FILE OR THE LITERATURE THAT CAME WITH THE HOT WATER PANEL FOR THE REST OF THE HOT WATER PANEL WIRING.

3 IF THE BACKUP HEAT SOURCE IS ZONED FORCED AIR, THEN THE THERMOSTAT WOULD WIRE TO ONE OF THE ZONES ON THE ZONE PANEL RATHER THAN TO THE FURNACE DIRECTLY.

4 PERTINENT THERMOSTAT CON FIGURATION SETTINGS:
HEATING SYSTEM = HEAT PUMP (EVEN THOUGH THIS IS NOT CONTROLLING A HEAT PUMP APPLICATION)
HEATING EQUIPMENT = GEOTHERMAL RADIANT
RADIANT STAGES = 1
GEO FORCED AIR = NONE IF COOLING IS NOT USED, COOL ONLY IF THE BACKUP COOLING IS USED.
BACKUP HEAT STAGES = 1
BACKUP HEAT TYPE = ELECTRIC OR GAS/OIL
BACKUP HEAT DROOP = (INSTALLER PREFERENCE, COMFORT OR DROOP) COMFORT WILL RUN THE BACKUP HEAT WITH THE HOT WATER HEAT MORE FREQUENTLY. DROOP WILL HOLD OFF THE BACKUP HEAT UNLESS THE INDOOR TEMPERATURE DROPS TO THE DROOP SETTING WHILE THE THERMOSTAT IS RUNNING THE RADIANT HEAT DURING STEADY STATE.

5 IF THERE IS A HEAT PUMP USED, THE WIRING AND CONFIG SETTINGS WOULD BE DIFFERENT THAN SHOWN IN THIS DIAGRAM.

6 COMPATIBLE THERMOSTATS:
TH8321WF1001
TH8321R1001 (WIRED AT WALL PLATE OR USED WITH THM5421R1021 EIM)
YTHX9421R5085 PRESTIGE THERMOSTAT KIT (EIM INCLUDED)

MCR37976

Staging a boiler + secondary heat using a 2 stage thermostat without isolation relay (thermostat with special Geothermal radiant settings required. See models listed in Note 6 above).

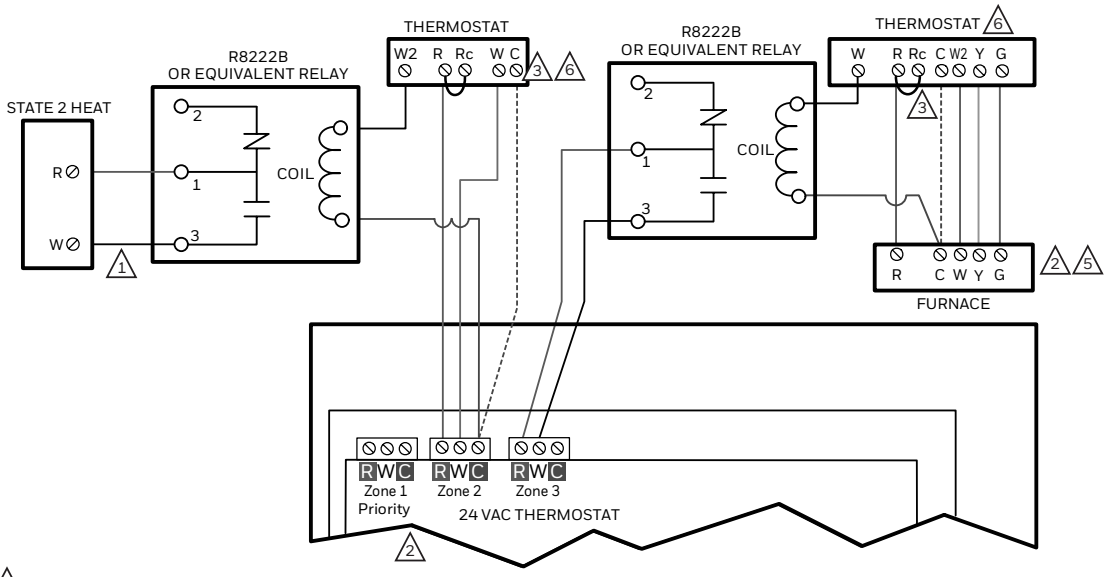

1 THE WIRING EXAMPLE SHOWN ON ZONE 2 OF THE HYDRONIC PANEL WOULD BE USED IF THE SECOND STAGE HEAT SOURCE DOESN'T HAVE COMMON TERMINAL AND COOLING IS NOT USED. THE WIRING CIRCUIT ALSO ASSUMES THE STAGE 2 HEAT SOURCE HAS A BUILT-IN POWER SUPPLY. IF IT DOES NOT, THE POWER SUPPLY SHOULD BE WIRED IN SERIES WITH THE STAGE 2 HEAT CIRCUIT.

2 THE WIRING EXAMPLE SHOWN ON ZONE 3 OF THE HYDRONIC PANEL WOULD BE USED IF COOLING IS BEING CONTROLLED BY THE THERMOSTAT OR IF THE SECOND STAGE HEAT SOURCE HAS A COMMON TERMINAL AVAILABLE.

3 COMMON WIRE IS OPTIONAL ON MOST NON-WIFI MODELS. IF COOLING IS NOT USED, DISREGARD THE Y AND G WIRES.

4 THIS DIAGRAM SHOWS HOW A 2 STAGE THERMOSTAT CAN BE INTEGRATED TO A HYDRONIC PANEL FOR STAGE 1 HEAT AND A DIFFERENT HEAT SOURCE FOR BACKUP HEAT. THE DIAGRAM DOES NOT SHOW WIRING FOR THE BOILER, PUMP(S), VALVES, DHW CIRCUIT, ETC. SEE OTHER DIAGRAMS IN THIS FILE OR THE LITERATURE THAT CAME WITH THE HOT WATER PANEL FOR THE REST OF THE HOT WATER PANEL WIRING.

5 IF THE BACKUP HEAT SOURCE IS ZONED FORCED AIR, THEN THE THERMOSTAT WOULD WIRE TO ONE OF THE ZONES ON THE ZONE PANEL RATHER THAN TO THE FURNACE DIRECTLY.

MCR37977

Staging a boiler + secondary heat using a 2 stage thermostat & an isolation relay. (Relay not required with select thermostat models. See previous diagram.)

AQ250 Electronic Relay Boiler Control Panel for Hydronic Zoning System

AQ250 boiler controls for single temperature, residential hydronic heating systems ensure ample supply of hot water for space heating and domestic uses. Convert single zone heating systems or upgrade relay-logic zoning systems.

- Use with AQ1000 two-wire communicating thermostats, or most dry contact digital thermostats
- Offers zoning control for up to four zones and controls up to two stages of heat from a single thermostat
- Can expand up to 16 zones with AQ255 or AQ257
- Line or low-voltage output for zoning equipment, including pumps or valves
- Features zone synchronization through the zone control
- Includes domestic hot water priority, priority override protection and boiler short cycling protection
- Automated test feature for quick start-up and simplified troublshooting

Application: Boiler control for zoned hydronic systems
Thermostat Compatibility: AQ1000 Series 2-wire communicating thermostats and most digital thermostats
User Interface: DIP Switches
Boiler Heat Post Purge: 30 seconds (sent to DHW tank or Zone of Greatest Demand - selectable)
Pump/Valve Exercise: 30 seconds per 2 weeks of space heating inactivity
R-C Output (on Transformer): 38 VA, 24 Vac Class II
R-C Input (on Control and Zoning Modules): 24 Vac Class II
Demand Input: Heat Demand (Thermostat R-W) and DHW Demand – External dry contacts connection only
B-B Communication Bus Terminals: Low voltage, Class II, 2-wire polarity-insensitive, digital communicating link to other Control or Zoning modules.
Zone Module Thermostat Input: Low voltage, Class II, 2-wire polarity-insensitive, digital communicating with power link to AQ1000 series thermostat.
ZR-ZC Contact Rating: 120 to 240 Vac, 1/3 HP
Output Ratings: Boiler (T-T) – 24 Vac, 0.5A, 12VA; Boiler Pump – 120 Vac/250 Vac 5A, 1/3HP; DHW Pump/Valve – 120 Vac/250 Vac 5A, 1/3HP; Auxiliary Pump – Dry contact output, 120 Vac/250 Vac 5A, 1/3 HP
Electrical Connections: Wire-clamp screw terminals, Maximum 2 x 14 AWG each on line voltage terminals
Operating Humidity Range (% RH): 5 to 90% RH, non-condensing
Sensor: Supply/Return Sensor – 10 kilohm NTC thermistor at 25°C (77°F) ±0.5°F (±0.3°C) up to 500 ft (150 M) using 18 AWG or larger wire, Lead Length: 10 ft. (3050 mm); Outdoor Sensor – 10 kilohm NTC thermistor at 25°C (77°F) ± 0.5°F (±0.3°C) up to 500 ft (150 M) using 18 AWG or larger wire, beta=3892, Lead Length: 10 ft. (3050 mm)
Approvals, CSA: CSA C/US Certified to CSA and UL Standards, File No. 273699
Approximate, Dimensions: 13 in. wide x 8 in. high x 3 3/8 in. deep (33 cm wide x 20.3 cm high x 8.5 cm deep)
Weight: 4.9 lbs (2.3 kg)
Temperature Ratings: Panel – 32°F to 130°F; Sensor – -58°F to +230°F (Panel – 0°C to 55°C; Sensor – -50°C to +110°C)
Supply Voltage: 120V 60 Hz

Material Number	Zoning Devices Controlled	Number of Zones	Zone Output Contact Rating	Replacement Parts
AQ25042B/U	Zone pumps or 2-wire valves (line voltage)	4	Pumps: 120 Vac/250 Vac, 5A, 1/3 HP, Valves: 24 Vac, 0.5 A, 12 VA	AQ10X38 24 Vac 38 VA transformer, AQ15540B 4-zone pump expansion module, AQ12C11 supply/return/mixed loop sensor, AQ15000B boiler control module
AQ25044B/U	Zone valves with end switches	4	Pumps: 120 Vac/250 Vac, 5A, 1/3 HP, Valves: 24 Vac, 0.5 A, 12 VA	AQ10X38 24 Vac 38 VA transformer, AQ12C11 supply/return/mixed loop sensor, AQ15000B boiler control module, AQ15740B 4-zone valve with end switch expansion module

AQ255 and AQ257 Zoning Expansion Panel for Hydronic Zoning System

AQ255 expansion zoning panels work with AQ2000 boiler control panels and AQ1000 communicating thermostats to control up to four space heating zones, up to 16 zones with additional panels.

- Features AQ255 for zoning with pumps or zone valves without end switches
- Auto test function tests zones at system start up and allows for operator controlled testing of zones
- LED lights offer visual diagnostics of zone operation
- Adjacent zoning panels can operate different zone equipment
- Easily switch from zone valves to pumps with same zoning module
- R-C transformer and B-B data bus terminal connections (network communication) for easy expansion
- Zones can energize a group pump via Aux Out dry contacts
- Zone synchronization through zone control

Application: Zoning control for hydronic zoning system
Thermostat Compatibility: AQ1000 Series 2-wire communicating thermostats and most digital thermostats
User Interface: DIP Switches
R-C Input (on Control and Zoning Modules): 24 Vac Class II (input on Control and Zoning Modules)
B-B Communication Bus Terminals: Low voltage, Class II, 2-wire polarity-insensitive, digital communicating link to other Control or Zoning modules.

Zone Module Thermostat Input: Low voltage, Class II, 2-wire polarity-insensitive, digital communicating with power link to AQ1000 series thermostat.
Electrical Connections: Wire-clamp screw terminals, Maximum 2 x 14 AWG each on line voltage terminals
Operating Humidity Range (% RH): 5 to 90% RH, non-condensing
Approvals, CSA: CSA C/US Certified to CSA and UL Standards, File No. 273699
Approximate, Dimensions: 9 1/2 in. wide x 8 in. high x 3 3/8 in. deep (24 cm wide x 20.3 cm high x 8.5 cm deep)
Temperature Ratings: Panel – 32°F to 130°F (Panel – 0°C to 55°C)

Material Number	Zoning Devices Controlled	Number of Zones	Zone Output Contact Rating	Weight	Replacement Parts
AQ25542B/U	Zone pumps or 2-wire valves (line voltage)	4	120 Vac/250 Vac, 5A, 1/3 HP	2.1 lbs (1 kg)	AQ15540B 4-zone pump expansion module
AQ25742B/U	2-wire valve (24 Vac)	4	120 Vac/250 Vac, 0.5A, 12VA	3.9 lbs (1.8 kg)	AQ10X38 24 Vac 38 VA transformer, AQ15540B 4-zone pump expansion module
AQ25744B/U	Zone valves with end switches (24 Vac)	4	120 Vac/250 Vac, 0.5A, 12VA	3.9 lbs (1.8 kg)	AQ10X38 24 Vac 38 VA transformer, AQ15740B 4-zone valve with end switch expansion module

AQ25042B + AQ25542B

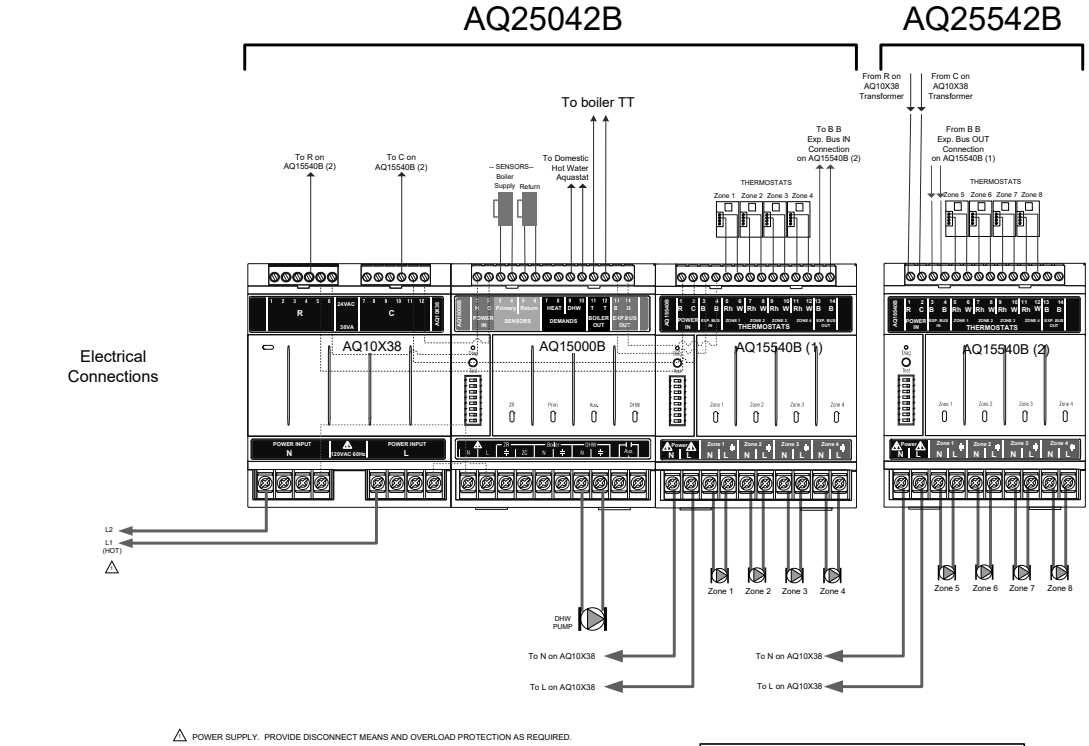

⚠ POWER SUPPLY. PROVIDE DISCONNECT MEANS AND OVERLOAD PROTECTION AS REQUIRED.

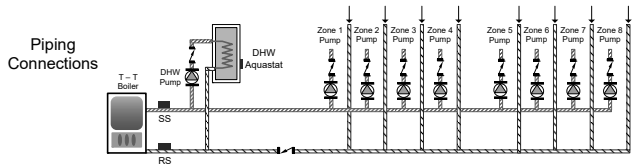

Legend

- - - - - - - -	Factory Wiring (low voltage)
- - - - - - - -	Factory Wiring (line voltage)
- - - - - - - -	Factory Wiring (communication bus)
————	Field Wiring (low voltage)
————	Field Wiring (line voltage)
————	Field Wiring (communication bus)
SS	Supply Sensor
RS	Return Sensor

NOTE: This is only a concept drawing. The system designer must design the complete multi-zone system from the ground up to ensure proper and safe operation of the hydronic and electrical systems, as well as compliance with building and safety code requirements. Necessary auxiliary equipment and safety devices must be used.

V. 10

AQ25044B + AQ25744B

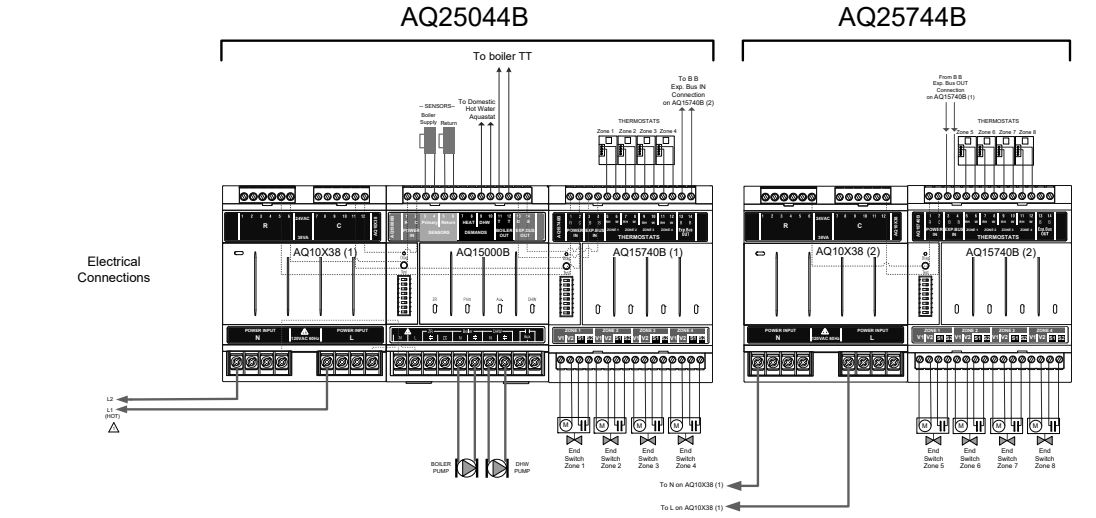

⚠ POWER SUPPLY. PROVIDE DISCONNECT MEANS AND OVERLOAD PROTECTION AS REQUIRED.

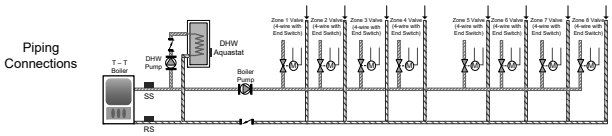

Legend

- - - - - - - -	Factory Wiring (low voltage)
- - - - - - - -	Factory Wiring (line voltage)
- - - - - - - -	Factory Wiring (communication bus)
————	Field Wiring (low voltage)
————	Field Wiring (line voltage)
————	Field Wiring (communication bus)
SS	Supply Sensor
RS	Return Sensor

NOTE: This is only a concept drawing. The system designer must design the complete multi-zone system from the ground up to ensure proper and safe operation of the hydronic and electrical systems, as well as compliance with building and safety code requirements. Necessary auxiliary equipment and safety devices must be used.

V. 10

R847 Heavy Duty Relay

R847A wired to break one side of the circuit with SPST switching.

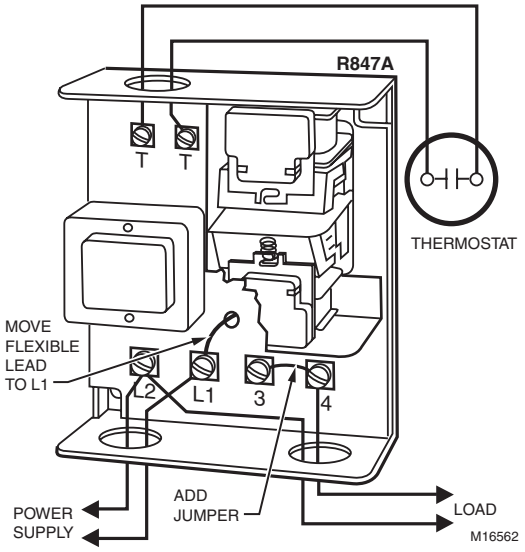

Designed for control of relatively heavy duty 120 or 240 Vac electrical loads such as cooling compressors.

- Internal, flexible leads permit SPST or DPST switching.

Application: Enclosed heavy duty DPST or SPST switching relay for 24 volt 2-wire thermostat control of high-current loads such as cooling compressors. 120 volt primary power supply.
Electrical Connections: Main- 2-Wire; Control Circuit- 2-Wire
Coil Ratings Voltage: 24 Vac; Maximum Pull-in Voltage-2.0 A
Coil Ratings: 8.4 VA (Sealed); 21.4 VA (inrush)
Coil Ratings Current: 0.4A
Contact Ratings (AFL): 22A @ 120 Vac: 10A @ 240 Vac
Contact Ratings (ALR): 120 Vac – 100A; 240 Vac – 50A
Approximate, Dimensions: 5 1/4 in. high x 4 1/4 in. wide x 2 3/4 in. deep (133 mm high x 108 mm wide x 70 mm deep)
Approvals, CSA: Certified: File No. LR1620
Approvals, Underwriters Laboratories Inc.: Listed: File No. SA481, Guide No. SDF4
Tradeline Value: Tradeline

Material Number	Input Voltage	Frequency	Switching	Description	Includes
R847A1085/U	120V	50 Hz; 60 Hz	DPST or SPST	This 120V, 50 Hz or 60 Hz Heavy Duty Switching Relay with integral transform, and DPST or SPST line voltage relays, is used for 24 volt 2-wire thermostat control of high-current loads such as cooling compressors.	Integral transformer, enclosure

R856 Control Center

Provides 24 volt control of line voltage motors, fans, blowers, or pumps up to 1 hp.

- Integral 45 VA transformer to supply low voltage power for the system.
- Low voltage terminal strip for easy thermostat and panel connections.

Application: Enclosed fan center for 24 volt control of a line voltage motor, evaporator fan, or pump up to 1 horsepower. Includes wring terminal board and 45 VA transformer.
Input Voltage: 120V
Frequency: 60 Hz
Coil Ratings: 6 VA (Sealed); 11 VA (inrush)
Coil Ratings Current: 0.22A
Electrical Ratings, Contacts: Horsepower – 3/4 hp N.O.; 1/2 hp N.C.
Contact Ratings (AFL): 14.0A N.O.; 10.0A N.C. @ 120 Vac
Contact Ratings (ALR): 120 Vac – 84.0A N.C., 80.0A N.C.
Approximate, Dimensions: 7 1/8 in. high x 4 1/2 in. wide x 3 5/16 in. deep (181 mm high x 114 mm wide x 84 mm deep)
Approvals, CSA: Certified: File No. LR95329-1
Approvals, Underwriters Laboratories Inc.: Listed: File No. E4436, Vol. 6 Sec. 9
Includes: External transformer, enclosure

Material Number	Coil Ratings Voltage	Switching
R856B1002/U	24 Vac	SPST

RA89; RA832; R845 Hydronic Switching Relay

Provides intermediate switching of a line voltage device from a low voltage controller.

- Integral transformer provides low voltage power for control circuit

Input Voltage: 120V
Electrical Connections: Control Circuit- 2-Wire
Frequency: 50 Hz; 60 Hz
Coil Ratings Voltage: 24 Vac
Coil Ratings Current: 0.4A
Electrical Ratings: Maximum Input-5.0 W
Contact Ratings (resistive): At 120 Vac –10A; 240 Vac – 6.0A
Temperature Ratings: 115°F maximum ambient for 60 Hz. 105°F Max. Ambient for 50 Hz. (46°C maximum ambient for 60 Hz. 41°C maximum ambient for 50 Hz.)
Approximate, Dimensions: 5 1/4 in. high x 4 1/4 in. wide x 2 5/16 in. deep (133 mm high x 108 mm wide x 59 mm deep)
Approvals, CSA: Certified: File No. LR1620
Approvals, Underwriters Laboratories Inc.: Listed: File No. E4436, Guide No. XAPX
Includes: Integral transformer, enclosure
Tradeline Value: Tradeline

Material Number	Application	Switching	Electrical Ratings, Contacts	Contact Ratings (AFL)	Contact Ratings (ALR)	Pilot Duty Ratings	Description	Comment
R845A1030/U	Enclosed intermediate DPST switching relay for 24 volt 2 wire thermostat control of one line voltage and one line or low voltage devices. 120 volt primary power supply.	DPST; one pole line voltage, the other line or low voltage	Maximum connected load is 2000 VA (120 Vac to 240 Vac)	At 120 Vac – 7.4A; 240 Vac – 3.7A: Secondary – at 120 Vac 3A; at 240 Vac 2A	At 120 Vac – 44.4A; 240 Vac –22.2A: Secondary – at 120 Vac 18A; at 240 Vac 12A	Secondary – 50 VA @ 24V	This 120V, 60 Hz Switching relay with internal transformer, provides DPST switching for hot water zone control systems, or SPST control of two separate loads.	Thermostat Compatibility – Low voltage (Class 2) 2-wire
RA832A1066/U	Provide intermediate DPST switching of a line voltage device from a low voltage controller.	DPST; one pole line voltage, the other low voltage or millivolt	Maximum connected load is 2000 VA (120 Vac to 240 Vac); Secondary DC Rating – 1A @ 12 Vdc; Secondary millivolt Rating – 300 mA min. @ 750 mV	At 120 Vac – 7.4A AFL; 240 Vac – 3.7A	At 120 Vac – 44.4A; 240 Vac – 22.2A	Secondary – 50 VA @ 24V	This 120V Switching Relay with internal transformer is used for DPST switching of two line voltage loads having a common power source.	
RA89A1074/U	Provide intermediate SPST switching of a line voltage device from a low voltage controller.	SPST		At 120 Vac – 10.2A; 240 Vac – 5.1A	At 120 Vac – 61.2A; 240 Vac – 30.6A		This 120V Switching Relay with internal transformer, provides intermediate SPST switching of a line voltage device from a low voltage controller.	
RA832A1074/U	TRADELINE		240/50-60					
RA832A1082/U	TRADELINE, NARP SPECIAL		120V, 50/60 HZ.					
RA89A1116/U	TRADELINE, NARP SPECIAL							

R8845U Universal Switching Relay

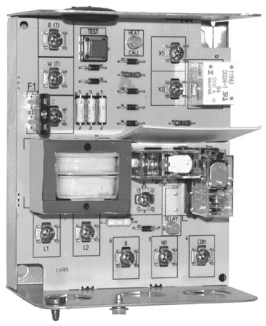

The R8845U Universal Switching Relay with 24 V transformer provides intermediate switching of line- and low-voltage devices from a line- or low-voltage controller and is typically applied in Hydronic heating systems.

- Replaceable socketed relays.
- Two troubleshooting LED.
- Push-to-test button.
- Replaceable transformer fuse.
- Low-voltage contact rating for PowerPile applications.
- Long-life DC relay drive control technology.
- Relay for use with external 24 Vac or 24 Vdc supply, with line-voltage control, or with internal 24 V transformer supply.
- One model replaces many competitor models.
- One model may replace many Honeywell models, now manufactured by Resideo: R182A,B,C,J; R482A,B,C,J; R845; R882A,B,C,J and RA832.

Dimensions in inches (millimeters)

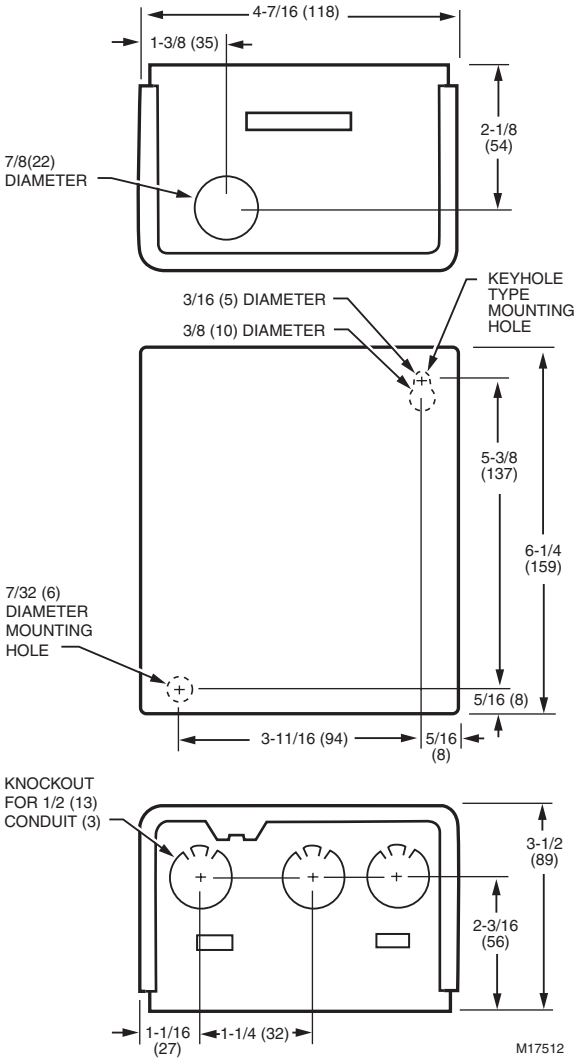

Application: Enclosed Universal switching relay with internal transformer for 24 volt 2 or 3 wire thermostat control of line voltage devices. Two line voltage SPST relays and one low voltage SPST relay with PowerPile rating.
Electrical Connections: Control Circuit- 2 or 3-wire
Coil Ratings Voltage: 24 Vac
Coil Ratings Current: 0.4A
Electrical Ratings, Contacts: Maximum connected load is 2000 VA
Contact Ratings (AFL): 7.4A AFL, 44.4A @ 120 Vac on each set of line-voltage contacts
Transformer: Secondary Rating- 24 Vac, 12 VA max., 9 VA available for external load. Secondary protected by replaceable 1A automotive fuse.
Operating Humidity Range (% RH): 0 to 90% RH, non-condensing
Temperature Ratings: Ambient: -20°F to +120°F (Ambient: -29°C to +49°C)
Approximate, Dimensions: 6 1/4 in. high x 4 7/16 in. wide x 3 1/2 in. deep (159 mm high x 118 mm wide x 89 mm deep)
Approvals, Underwriters Laboratories Inc.: Listed: File No. E4436, Guide No. XAPX
Approvals, Canadian Underwriters Laboratories Inc.: Listed: Guide No. XAPX7.
Comments: Thermostat Compatibility – Honeywell (now manufactured by Resideo) electromechanical and electronic 2- or 3-wire; Thermostat Heat Anticipator Setting – 0.12A

Material Number	Input Voltage	Frequency	Switching	Description	Includes
R8845U1003/U	120V	60 Hz	Two SPST, plus PowerPile® rated low voltage SPST relay. (If normally closed contacts are needed, use RA889A).	This 120V, 60 Hz Universal Switching Relay with internal transformer, Provides intermediate switching of line and low voltage devices from a line or low voltage controller	Integral transformer, enclosure

RA889A Switching Relay

The RA889A Switching Relay with 24 V controller provides intermediate switching of line- and low-voltage devices from a line- or low-voltage controller and is typically applied in Hydronic heating systems.

- High load switching capability.
- Troubleshooting LED.
- Push-to-test button.
- Replaceable transformer fuse.
- Long-life DC relay drive control technology.
- Relay for use with external 24 Vac or 24 Vdc supply, with line-voltage control, or with internal 24 V transformer supply.
- One model replaces many Honeywell models, now manufactured by Resideo.
- Secondary of transformer protected by replaceable 1A automotive fuse.

Dimensions in inches (millimeters)

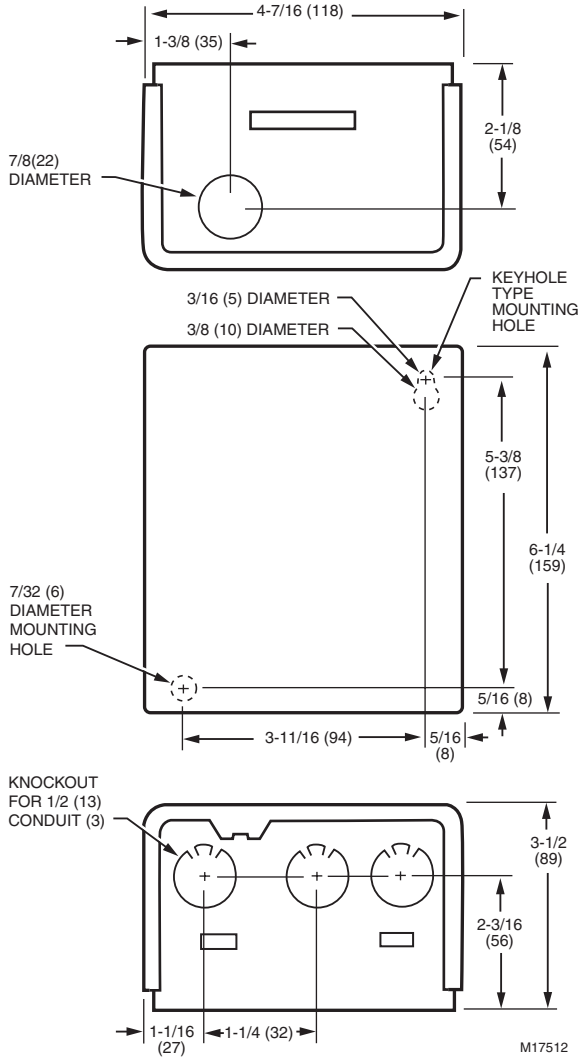

Application: Provide intermediate SPDT and SPST switching of line- and low-voltage devices from a line- or low-voltage controller.
Electrical Ratings, Contacts: Maximum connected load is 2000 VA
Contact Ratings (AFL): 15A@ 120 Vac
Contact Ratings (ALR): 120 Vac – 30A
Transformer: Secondary Rating- 24 Vac, 12 VA max., 9 VA available for external load. Secondary protected by replaceable 1A automotive fuse.
Operating Humidity Range (% RH): 0 to 90% RH, non-condensing
Temperature Ratings: Ambient: -20°F to +120°F (Ambient: -29°C to +49°C)
Approximate, Dimensions: 6 1/4 in. high x 4 7/16 in. wide x 3 1/2 in. deep (159 mm high x 118 mm wide x 89 mm deep)
Approvals, Underwriters Laboratories Inc.: Listed: File No. E4436, Guide No. XAPX
Approvals, Canadian Underwriters Laboratories Inc.: Listed: Guide No. XAPX7.
Comments: Thermostat Compatibility – Honeywell (now manufactured by Resideo) electromechanical and electronic 2- or 3-wire; Thermostat Heat Anticipator Setting – 0.12A

Material Number	Input Voltage	Frequency	Switching	Description	Includes
RA889A1001/U	120V	60 Hz	SPDT, plus PowerPile® rated low voltage SPST relay	This Enclosed 120V, 60 Hz switching relay with internal transformer, Provides intermediate SPDT and SPST switching of line- and low-voltage devices from a line- or low-voltage controller.	Integral transformer, enclosure

L4006; L6006 Aquastat® Controller

Approvals, CSA: File No. 095329

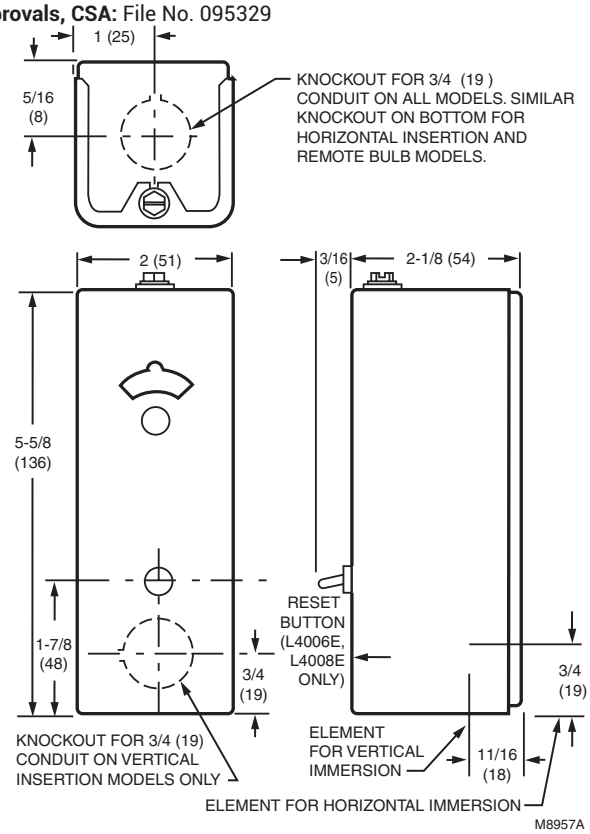

Aquastat® Controllers are immersion type devices for limiting or regulating the temperature of liquids in boilers, storage tanks, and other applications where temperature control is required.

- Totally enclosed Micro Switch™ snap-acting switches operate on temperature rise to setpoint.
- Visible control point scale and external adjustment screw permit easy setting.
- Horizontal or vertical insertion of the sensing element.
- Direct or well immersion of the sensing element.
- Models available for strap-on mounting.
- Remote bulb model may be used to sense air temperature in ducts and in outside air sensing applications.
- Select models have wells.
- UL limit rated device.

Temperature Range: Maximum – 150°F (Maximum – 66°C)
Bulb Size: 3/8 in. x 2 7/8 in. copper (10 mm x 73 mm copper)
Electrical Ratings:
At Full Load – 8 A @ 120 Vac: 5.1 A @ 240 Vac;
At Locked Rotor – 48 A @ 120 Vac: 30.6 A @ 240 Vac
Millivolt – 0.25 A @ 0.25 to 12 Vdc
Dimensions: Case – 5 5/8 in. high x 2 in. wide x 2 1/8 in. deep (Case – 143 mm high x 51 mm wide x 54 mm deep)
Approvals, Underwriters Laboratories Inc.: UL Component Recognized: File No. MP466, Vol. 6, Sec.1, Guide No. MBPR2

Material Number	Application	Switching Action	Operating Temperature Range	Differential Temperature	Well Spud Size	Capillary Length	Mounting	Includes
L4006A1009/U	High or Low limit	SPST, contacts break on temperature rise.	100°F to 240°F (38°C to 116°C)	5°F Fixed (3°C fixed)	1/2 in. NPT (13 mm NPT)	1 1/2 in. (38 mm)	Horizontal or Vertical	1/2 in. well - 123869A
L4006A1017/U	High or Low limit	SPST, contacts break on temperature rise.	100°F to 240°F (38°C to 116°C)	5°F to 30°F adj. (3°C to 17°C adj.)	1/2 in. NPT (13 mm NPT)	1 1/2 in. (38 mm)	Horizontal or Vertical	1/2 in. well - 123869A
L4006A1678/U	High or Low limit	SPST, contacts break on temperature rise.	100°F to 240°F (38°C to 116°C)	5°F to 30°F adj. (3°C to 17°C adj.)	–	3 in. (76 mm)	Horizontal or Vertical	Stop factory-set at 240°F (116°C); Heat-conductive compound
L4006A1959/U	High or Low limit	SPST, contacts break on temperature rise.	40°F to 180°F (4°C to 82°C)	5°F Fixed (3°C fixed)	–	3 in. (76 mm)	Horizontal or Vertical	Heat-conductive compound
L4006A1967/U	High or Low limit	SPST, contacts break on temperature rise.	100°F to 240°F (38°C to 116°C)	5°F to 30°F adj. (3°C to 17°C adj.)	1/2 in. (13 mm)	1 1/2 in. (38 mm)	Horizontal or Vertical	1/2 in. well - 123869A; Stop factory-set at 240°F (116°C)
L4006A2007/U	High or Low limit	SPST, contacts break on temperature rise.	100°F to 240°F (38°C to 116°C)	5°F to 30°F adj. (3°C to 17°C adj.)	–	3 in. (76 mm)	Horizontal	–
L4006B1007/U	Circulator	SPST, contacts make on temperature rise.	100°F to 240°F (38°C to 116°C)	5°F Fixed (3°C fixed)	1/2 in. (13 mm)	1 1/2 in. (38 mm)	Horizontal or Vertical	1/2 in. well - 123869A
L4006B1155/U	Circulator	SPST, contacts make on temperature rise.	100°F to 240°F (38°C to 116°C)	5°F to 30°F adj. (3°C to 17°C adj.)	–	3 in. (76 mm)	Horizontal or Vertical	Stop factory-set at 240°F (116°C); Heat-conductive compound

Material Number	Application	Switching Action	Operating Temperature Range	Differential Temperature	Well Spud Size	Capillary Length	Mounting	Includes
L4006B1163/U	Circulator	SPST, contacts make on temperature rise.	100°F to 240°F (38°C to 116°C)	5°F to 30°F adj. (3°C to 17°C adj.)	–	3 in. (76 mm)	Horizontal or Vertical	–
L4006E1067/U	High Limit; Manual Reset	SPST, contacts break on temperature rise.	130°F to 270°F (54°C to 132°C)	Manual Reset	–	3 in. (76 mm)	Horizontal or Vertical	Heat-conductive compound; Stop factory-set at 250°F (121°C); Well adapter
L4006E1091/U	High Limit; Manual Reset	SPST, contacts break on temperature rise.	130°F to 270°F (54°C to 132°C)	Manual Reset	–	3 in. (76 mm)	Horizontal or Vertical	–
L4006E1117/U	High Limit; Manual Reset	SPST, contacts break on temperature rise.	100°F to 240°F (38°C to 116°C)	Manual Reset	3/4 in. - 14 NPT (19 mm - 14 NPT)	1 1/2 in. (38 mm)	Horizontal or Vertical	3/4 in. well - 123870A
L4006E1125/U	High Limit; Manual Reset	SPST, contacts break on temperature rise.	100°F to 200°F (38°C to 93°C)	Manual Reset	–	3 in. (76 mm)	Horizontal or Vertical	–
L4006H1004/U	High Limit; strap-on mounting on well mount.	SPST, contacts break on temperature rise.	100°F to 240°F (38°C to 116°C)	Manual Reset	–	1 1/2 in. (38 mm)	Horizontal or Vertical	Bracket for strap-on mounting; Heat-conductive compound; Stop factory-set at 240°F (116°C)
L6006A1012/U	Circulator Control and High Limit or Low Limit	SPDT	100°F to 240°F (38°C to 116°C)	5°F to 30°F adj. (3°C to 17°C adj.)	1/2 in. (13 mm)	1 1/2 in. (38 mm)	Horizontal or Vertical	1/2 in. well - 123869A
L6006A1145/U	Circulator Control and High Limit or Low Limit	SPDT	100°F to 240°F (38°C to 116°C)	5°F to 30°F adj. (3°C to 17°C adj.)	–	3 in. (76 mm)	Horizontal	Stop factory-set at 240°F (116°C); Heat-conductive compound
L6006A1244/U	Circulator Control and High Limit or Low Limit	SPDT	100°F to 240°F (38°C to 116°C)	5°F to 30°F adj. (3°C to 17°C adj.)	–	3 in. (76 mm)	Horizontal or Vertical	–
L6006C1018/U	Circulator Control and High Limit and Low Limit	SPDT	65°F to 200°F (18°C to 93°C)	5°F to 30°F adj. (3°C to 17°C adj.)	–	–	Horizontal or Vertical Surface mounting	Stop factory-set at 200°F (93°C)
L6006C1034/U	Circulator and High and Low Limit	SPDT	65°F to 200°F (18°C to 93°C)	5°F to 30°F adj. (3°C to 17°C adj.)	–	–	Horizontal or Vertical Surface mounting	–

L4008; L6008 Remote Bulb Controller

For limiting or regulating temperature of liquids in boilers or tanks. Can also sense duct or outside air temperature.

- Remote temperature sensing element detects and responds rapidly to temperature changes.
- Totally enclosed Micro Switch™ snap-acting switch.
- Visible control point scale and external adjustment screw permit easy setting.
- Horizontal and/or vertical mounting of the remote element into boiler, tank, or other container unless otherwise noted.
- UL and CSA listed limit device.

Bulb Size: 3/8 in. x 2 7/8 in. copper (10 mm x 73 mm copper)
Electrical Ratings:
At Full Load – 8 A @ 120 Vac: 5.1 A @ 240 Vac;
At Locked Rotor – 48 A @ 120 Vac: 30.6 A @ 240 Vac
Millivolt – 0.25 A @ 0.25 to 12 Vdc
Temperature Range: Maximum Ambient – 150°F (66°C)
Mounting: Horizontal or Vertical
Dimensions: Case – 5 5/8 in. high x 2 in. wide x 2 1/8 in. deep (Case – 143 mm high x 51 mm wide x 54 mm deep)
Approvals, Underwriters Laboratories Inc.: UL Component Recognized: File No. MP466, Vol. 6, Sec.1, Guide No. MBPR2
Approvals, CSA: File No. 095329

Dimensions in inches (millimeters)

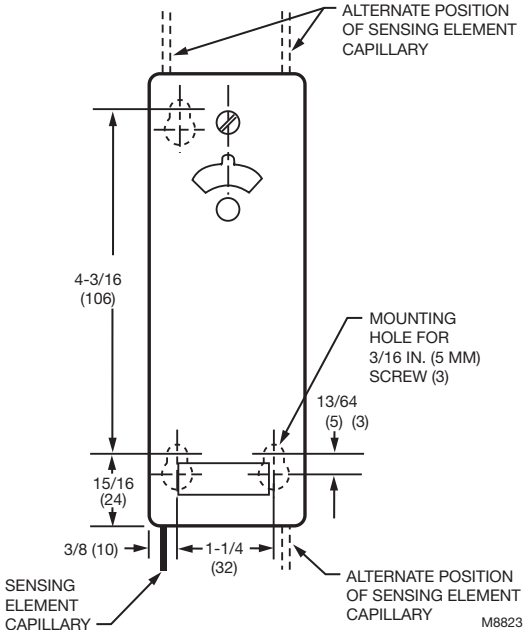

Material Number	Application	Operating Temperature Range	Differential Temperature	Capillary Length	Switching Action	Includes
L4008A1015/U	High or Low limit	100°F to 240°F (38°C to 116°C)	5°F to 30°F adj. (3°C to 17°C adj.)	66 in.	SPST, contacts break on temperature rise.	–
L4008A1130/U	High or Low limit	130°F to 270°F (54°C to 132°C)	5°F to 30°F adj. (3°C to 17°C adj.)	120 in.	SPST, contacts break on temperature rise.	Stop factory-set at 200°F (93°C)
L4008B1013/U	Circulator	100°F to 240°F (38°C to 116°C)	5°F to 30°F adj. (3°C to 17°C adj.)	66 in.	SPST, contacts make on temperature rise.	–
L4008E1156/U	High Limit; Manual Reset	130°F to 270°F (54°C to 132°C)	Manual Reset	66 in.	SPST, contacts break on temperature rise.	Stop factory-set at 250°F (121°C); Heat-conductive compound
L4008E1305/U	High Limit; Manual Reset	100°F to 240°F (38°C to 116°C)	Manual Reset	66 in.	SPST, contacts break on temperature rise.	Stop factory-set at 240°F (116°C)
L4008E1313/U	High Limit; Manual Reset	100°F to 200°F (38°C to 116°C)	Manual Reset	66 in.	SPST, contacts break on temperature rise.	–
L6008A1192/U	Circulator Control and Low Limit	100°F to 240°F (38°C to 116°C)	5°F to 30°F adj. (3°C to 17°C adj.)	66 in.	SPDT	Stop factory-set at 240°F (116°C)
L6008A1242/U	Circulator Control and Low Limit	100°F to 200°F (38°C to 93°C)	5°F to 30°F adj. (3°C to 17°C adj.)	66 in.	SPDT	–

L8100 Aquastat® Controller

L8100 are immersion type controllers for regulating and limiting the tank temperature in water heater and hydronic systems. As the water temperature rises past the setpoint, the controller switches off the gas valve.

- Regulates temperature and provides energy cutoff (ECO) action on a temperature rise past the setpoint.
- Includes a second sensing element that senses average water temperature to minimize stacking.
- Fluid-filled element operates Micro Switch™ SPST snap-acting switch.
- ECO switch interrupts the thermocouple circuit or main valve before tank reaches 210°F (99°C) maximum temperature.
- Includes factory-installed immersion well on controller.
- Internal adjustment screw.
- Special switch terminal provides three-wire hookup from Aquastat® controller to gas valve.

Dimensions in inches (millimeters)

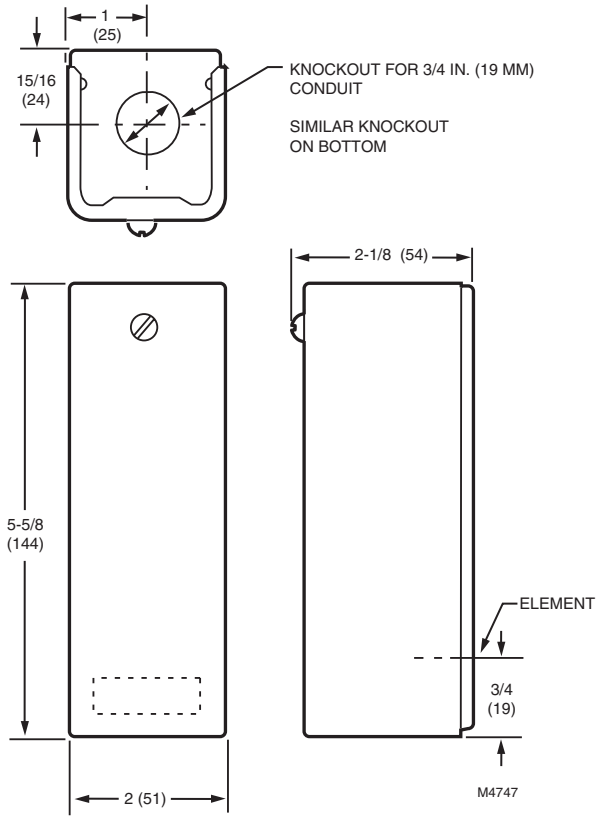

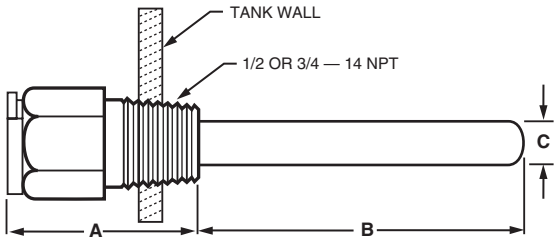

	CONTROLLER WELL		REMOTE WELL	
	IN.	MM	IN.	MM
A INSULATION DEPTH	2-1/4	57	1-1/2 OR 2-1/2	38 OR 64
B INSERTION DEPTH	5	127	3	76
C WELL DIAMETER	7/16	11	7/16	11

M4746

Operating Temperature Range: 100°F to 180°F (38°C to 82°C)
Differential Temperature:
Controller: 5°F (3°C), fixed.
Energy Cutoff Switch: 20°F (11°C), fixed.
Electrical Ratings: Millivolt – 2A maximum at 24 Vac
Mounting: Immersion Well
Temperature Range:
(ECO) Energy Cutoff: 190°F (88°C);
Tank Maximum: 210°F (99°C)
Dimensions: Case – 5 5/8 in. high x 2 in. wide x 2 1/8 in. deep (Case – 143 mm high x 51 mm wide x 54 mm deep)
Approvals, Underwriters Laboratories Inc.: UL Component Recognized: File No. MP466, Guide No. MBPR2
Approvals, CSA: File No. 112491

Material Number	Application	Bulb Size	Capillary Length	Insulation Depth	Switching Action	Includes
L8100B1128/U	High Limit	3/8 in. (10 mm)	39 in.	1 1/2 in. (38 mm)	SPST, contacts break on temperature rise.	–

L4081; L6081 Multiple Aquastat® Controllers

High limit, low limit and/or circulator controllers used to regulate boiler water temperature in gas- or oil-fired hydronic heating systems.

- An immersion type liquid-filled sensing element actuates two snap switches.
- One switch operates as a high limit control.
- The other switch operates as a low limit and/or circulator control, depending on the model.
- Controller may be mounted in any positioning and needs no leveling.
- Separate, easy-to-read, calibrated dial and setpoint adjustments for each switch.
- Differential adjustment on low limit or circulator switch on select models.
- All adjustments accessible inside front cover.
- Push-in terminals for quick connecting.
- Single sensing element for easy installation.
- Two SPST snap switches act independently at respective temperature settings.

Dimensions in inches (millimeters)

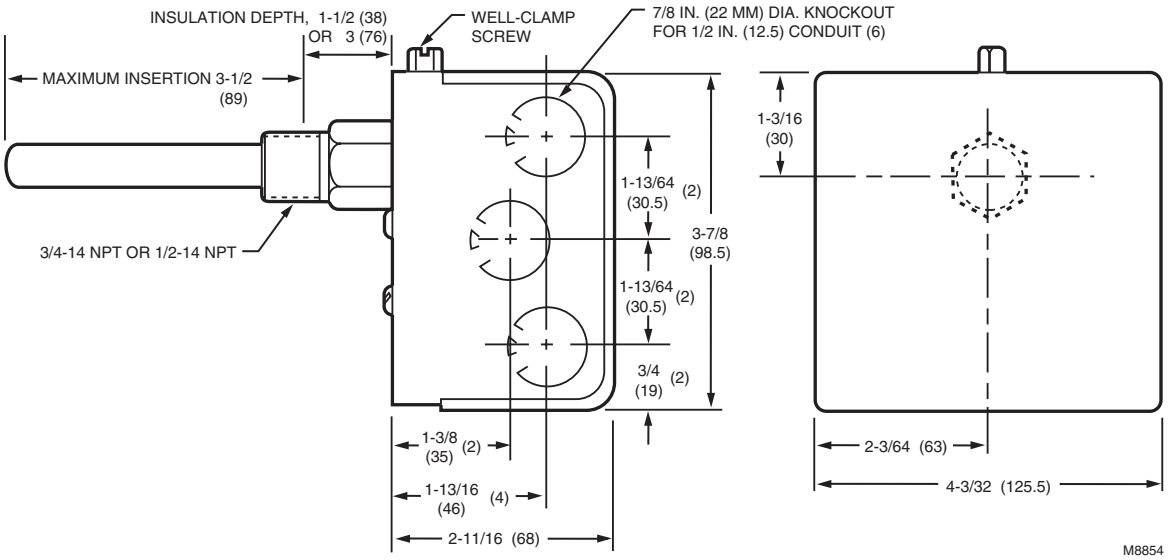

Temperature Range: Maximum – 150°F (66°C) at switches; 265°F (129°C) at sensing element
Operating Temperature Range:
High Limit – 130°F to 240°F (54°C to 116°C);
Low Limit –110°F to 220°F (43°C to 104°C)
Electrical Ratings: 0.25 A @ 0.25 to 12 Vdc;
At Full Load – 8A @ 120 Vac: 5.1A @ 240 Vac;
At Locked Rotor – 48A @ 120 Vac: 30.6A @ 240 Vac

Electrical Ratings, Ignition: Transformer Load: 360 VA
Mounting: Horizontal
Dimensions: 3 7/8 in. high x 4 1/8 in. wide x 2 3/4 in. deep. (98 mm high x 105 mm wide x 70 mm deep.)
Operating Humidity Range (% RH): 0 to 95% RH, non-condensing
Approvals, Underwriters Laboratories Inc.: UL Listed: File No. MP466, Vol. 12, Sec. 4, Guide No. MBPR2
Approvals, CSA: Certified: File No. LR95329-1

Material Number	Application	Differential Temperature	Well Spud Size	Insulation Depth	Switching Action
L4081A1023/U	High and Low limit	High limit : 10°F fixed; low limit: 10-25°F adj.	3/4 in. - 14 NPT (19 mm - 14 NPT)	1 1/2 in. (38 mm)	SPST: High & Low Limit
L4081B1047/U	High Limit and Circulator	High limit : 10°F fixed; low limit: 10-25°F adj.	3/4 in. - 14 NPT (19 mm - 14 NPT)	1 1/2 in. (38 mm)	SPST: High Limit & Circulator
L4081B1096/U	High Limit and Circulator	10°F Fixed	–	3 in. (76 mm)	SPST: High Limit & Circulator
L6081A1036/U	High and Low Limit and Circulator	High limit : 10°F fixed; low limit: 10-25°F adj.	3/4 in. - 14 NPT (19 mm - 14 NPT)	1 1/2 in. to 4 in. (38 mm)	SPST: High Limit SPDT: Low Limit and Circulator

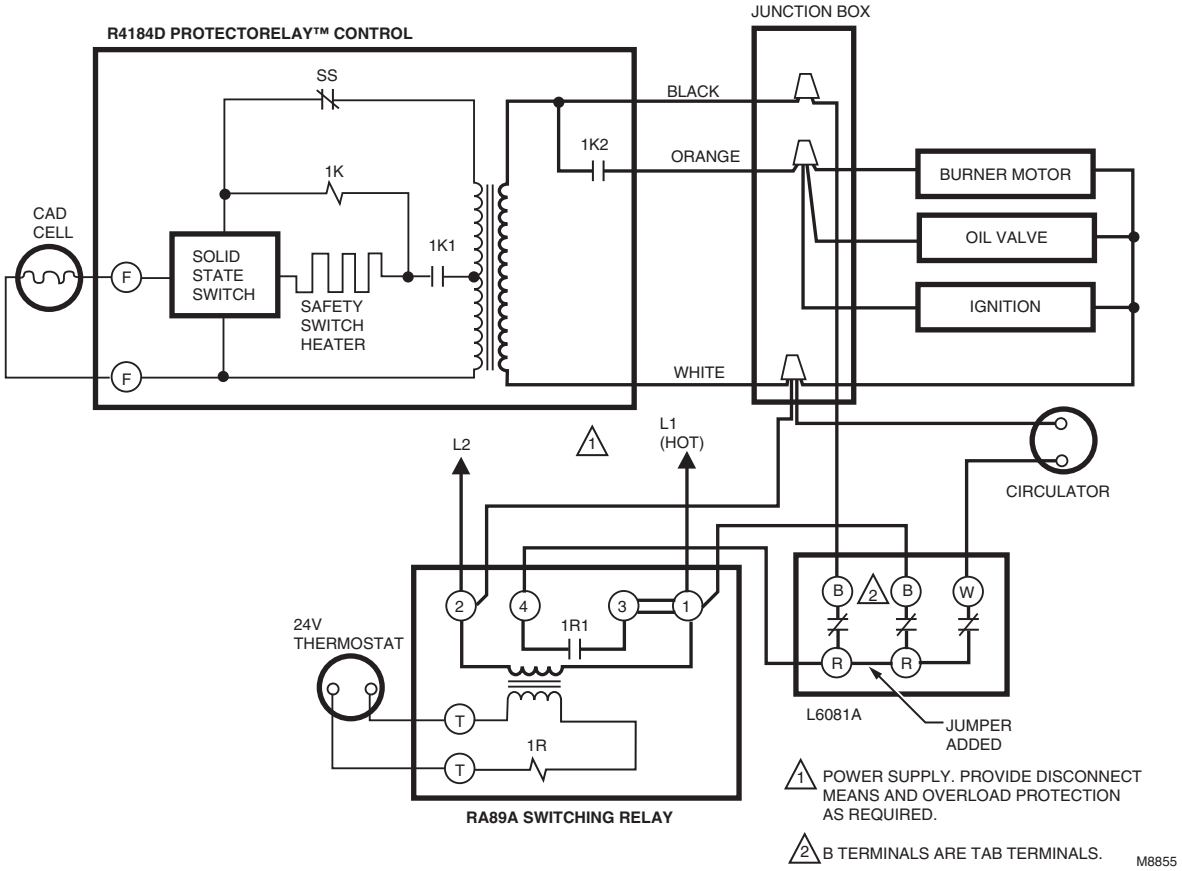
R4184D PROTECTORELAY™ CONTROL
JUNCTION BOX
SS
BLACK
1K2
ORANGE
1K
BURNER MOTOR
CAD
CELL
SOLID
STATE
SWITCH
1K1
OIL VALVE
F
SAFETY
SWITCH
HEATER
IGNITION
F
WHITE
L2
1
L1
(HOT)
CIRCULATOR
2
4
3
1
B
2
B
W
24V
THERMOSTAT
1R1
R
R
T
L6081A
JUMPER
ADDED
1R
T
RA89A SWITCHING RELAY
1 POWER SUPPLY. PROVIDE DISCONNECT MEANS AND OVERLOAD PROTECTION AS REQUIRED.
2 B TERMINALS ARE TAB TERMINALS.
M8855

L7224U Oil Electronic Aquastat Controller

Universally compatible and easy to install the L7224U allows for quick diagnostics updates through an easy-to-read LED display enhanced with a system of flashing lights. It's like an express checkout service for every installation. For quality circulator, oil burner and boiler control for today's systems and tomorrow's, the L7224U Aquastat is a state-of-the-art solution. Make the switch from electromechanical to electronic with the universally compatible L7224U.

- Complies with 2012 Department of Energy Standards
- Diagnostic updates through easy-to-read LED displays
- ± 2°F accuracy and faster response times
- Adjustable high- and low-limit differential
- Outdoor reset functionality available with W8735S1000 and W8735Y1000
- Provides multizone control
- Thermowell horizontal or vertical and flush mounting
- EnviraCOM™ communications enabled
- Compatible with W8735S3000 Alarm Module

Voltage: 120 Vac
Power Consumption: 7 VA
Frequency: 60 Hz
Temperature Range: -30°F to 150°F (-34°C to 66°C)
Operating Temperature Range:
High Limit – 130°F to 240°F (54°C to 116°C);
Low Limit – 110°F to 220°F (43°C to 104°C)
Dimensions: 7 1/8 in. high x 4 1/4 in. wide x 2 5/8 in. deep (181 mm high x 109 mm wide x 67 mm deep)
Operating Humidity Range (% RH): 0 to 95% RH, non-condensing
Approvals, Underwriters Laboratories Inc.: Recognized

Accessories:
120650/U – Heat Conductive Grease 1/2 oz.
121371AA/U – Well clamp assembly with clamp capillary 21371 (1) screws 804644 and nuts 60156
123869A/U – Copper. Bulb size: 3/8 in. x 3 in. (10 mm x 76 mm). Well size: 3 in. (76 mm) insertion, 1 1/2 in. (38 mm) insulation, 1/2 in. NPT.
123870A/U – Copper. Bulb size: 3/8 in. x 3 in. (10 mm x 76 mm). Well size: 3 in. (76 mm) insertion, 1 1/2 in. (38 mm) insulation, 3/4 in. NPT.
C7089R1013/U – Senses outdoor temperature and humidity to display on RedLINK® enabled thermostats and accessories.
C7089U1006/U – Outdoor Sensor used to measure the outdoor temperature for use with VisionPro and VisionPRO IAQ.
W8735ER1000/U – Wireless Outdoor Reset Module for use with L7224/L7248 series 2.
W8735S1000/U – Outdoor Reset Module for use with L7224/L7248 series 2. Includes outdoor sensor.
W8735S1008/U – Domestic Hot Water Module for use with L7224/L7248 series 2. Includes water pipe temperature sensor.
W8735Y1000/U – Outdoor Reset Module for use with L7224/L7248 series 2. Includes outdoor sensor C7089R1013.

Material Number	Application	Differential Temperature	Mounting	Electrical Ratings, Burner	Electrical Ratings, Circulator
L7224U1002/U	Oil Aquastat Controller	High limit : 5-20°F adj.; low limit: 10-25°F adj.	Well mount, horizontal or vertical position, or flush mounted remote from the well.	At Full Load – 7.4 A @ 120 Vac; At Locked Rotor – 44.4 A inrush	At Full Load – 7.4 A @ 120 Vac; At Locked Rotor – 44.4 A inrush

L8124 Triple Aquastat® Relay

Immersion-type controllers that combine high limit protection with low limit and circulator control in forced hydronic heating systems, including domestic hot water service.

- Provide multizone control by using a separate circulator and R845 Relay for each zone.
- Include diaphragm powerhead and Micro Switch™ assembly that respond to temperature changes in boiler water.
- Mount directly to boiler.
- Select models include large transformers and extra terminals for supplying power to low voltage zone valves.
- Require 24 Vac thermostat with heat anticipator set at 0.2 A (plus current draw of gas valve on L8124E).

Differential Temperature: High limit: 10°F fixed; low limit: 10-25°F adj.
Frequency: 60 Hz
Electrical Connections: Quick Connect/Screw
Switching Action: SPST: High Limit
SPDT: Low Limit and Circulator Control
Maximum Safe Operating Pressure (psi): 200 psi on outside of immersion well, 100 psi on capsule if inserted directly.
Maximum Safe Operating Pressure (kPa): 1378 kPa on outside of immersion well, 690 kPa on capsule if inserted directly.
Electrical Ratings, Circulator:
At Full Load – 7.4 A @ 120 Vac: 3.7 A @ 240 Vac;
At Locked Rotor – 44.4 A @ 120 Vac: 22.2 A @ 240 Vac
Electrical Ratings, Burner:
At Full Load – 7.4 A @ 120 Vac: 3.7 A @ 240 Vac;
At Locked Rotor – 44.4 A @ 120 Vac: 22.2 A @ 240 Vac
Operating Humidity Range (% RH): 0 to 95% RH, non-condensing
Operating Temperature Range:
High Limit – 130°F to 240°F (54°C to 116°C) adjustable;
Low Limit – 110°F to 220°F (43°C to 104°C) adjustable
Temperature Range: Maximum Ambient temp case: 150°F (66°C); Maximum Sensing element 265°F (129°C)
Approvals, Underwriters Laboratories Inc.: UL Listed (models with well): File No. MP466, Guide No. MBPR; UL Component Recognized (models without well): File No. MP466, Guide No. MBPR2
Approvals, CSA: File No. 095329

Material Number	Application	Burner Control Voltage	Insulation Depth	Mounting
L8124A1007/U	High Limit Protection, Low Limit and Circulation Control	120 Vac; 60 Hz	1 1/2 in. (38 mm)	Vertical Mount
L8124A1015/U	High Limit Protection, Low Limit and Circulation Control	120 Vac; 60 Hz	3 in. (76 mm)	Vertical Mount
L8124C1003/U	Triple Aquastat Relay with High limit	120 Vac; 60 Hz	1-1/2 in (38 mm)	Horizontal
L8124E1016/U	Triple Aquastat Relay with High limit	120 Vac; 60 Hz	–	Vertical Mount
L8124G1020/U	Triple Aquastat Relay with High limit	120 Vac; 60 Hz	–	Vertical Mount
L8124L1011/U	Triple Aquastat Relay with High limit	120 Vac; 60 Hz	–	Horizontal

Dimensions in inches (millimeters)

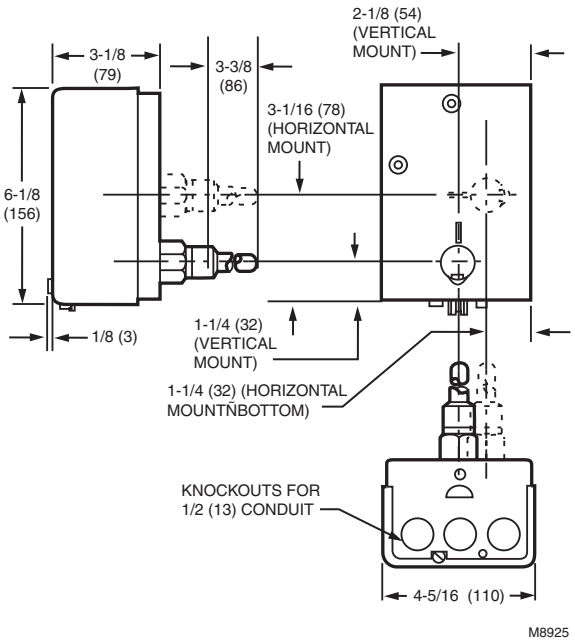

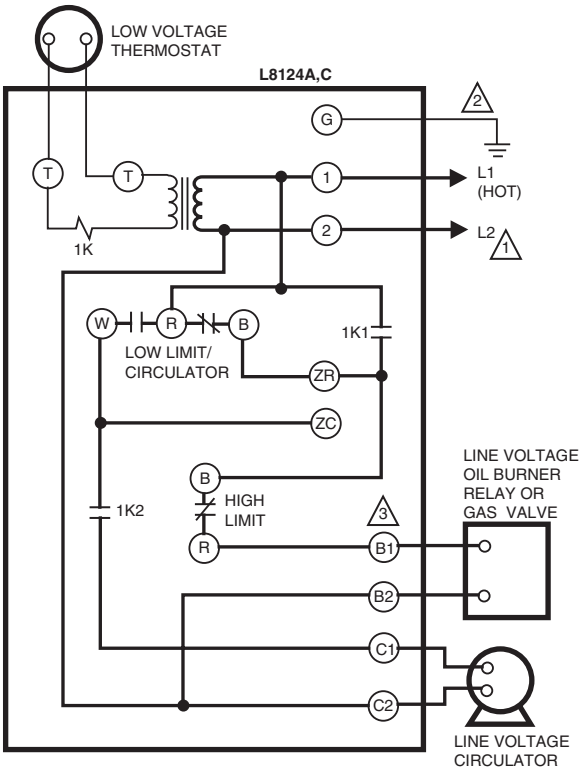

1 POWER SUPPLY. PROVIDE DISCONNECT MEANS AND OVERLOAD PROTECTION AS REQUIRED.

2 CONTROL CASE MUST BE CONNECTED TO EARTH GROUND. USE GROUNDING SCREW PROVIDED.

3 B1 IS 1/4 IN. TAB TERMINAL.

M8802

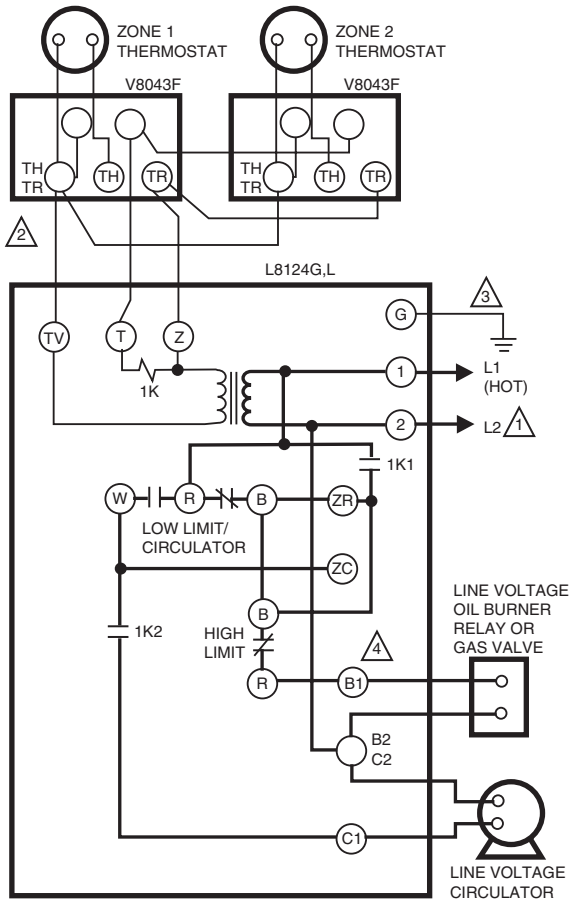

1 POWER SUPPLY. PROVIDE DISCONNECT MEANS AND OVERLOAD PROTECTION AS REQUIRED.

2 UP TO TWO V8043F ZONE VALVES CAN BE POWERED WITH L8124G,L. ADD ADDITIONAL TRANSFORMER FOR EVERY TWO OR LESS VALVES.

3 CONTROL CASE MUST BE CONNECTED TO EARTH GROUND. USE GROUNDING SCREW PROVIDED.

4 B1 IS 1/4 IN. TAB TERMINAL.

M1795B

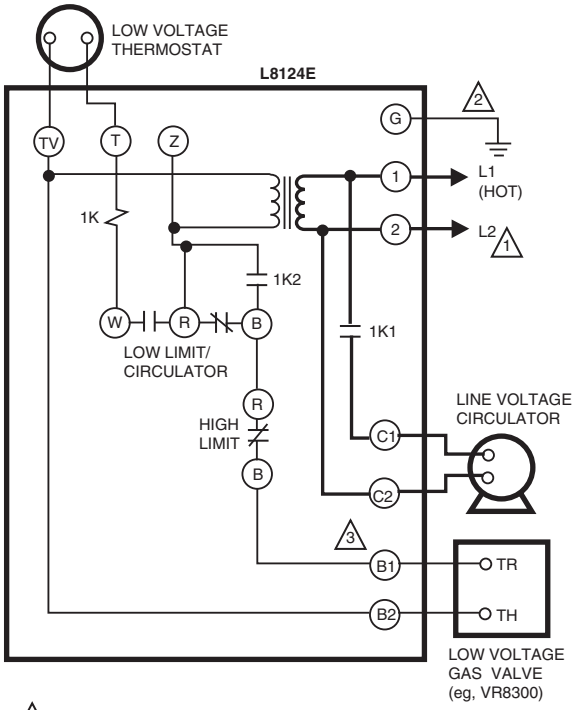

1 POWER SUPPLY. PROVIDE DISCONNECT MEANS AND OVERLOAD PROTECTION AS REQUIRED.

2 CONTROL CASE MUST BE CONNECTED TO EARTH GROUND. USE GROUNDING SCREW PROVIDED.

3 B1 IS 1/4 IN. TAB TERMINAL.

M8803

L8148 Aquastat Relay

Immersion-type controllers that combine high limit protection with switching relay control of burner and circulator motors.

- High limit opens burner circuit only.
- Select models include transformer and accessory terminals for adding a remote low limit controller.
- Case available for horizontal or vertical mounting.
- Requires a 24 Vac thermostat with heat anticipator set at 0.2A.

Application: High Limit
Voltage: 120 Vac
Frequency: 60 Hz
Temperature Range: Maximum – 150°F (66°C) with 1.2 A 24 V load; 77°F (25°C) with 1.4 A 24 V load
Capillary Length: 4 1/2 in. (114 mm)
Electrical Connections: Quick-Connect / Screw
Switching Action: SPST: High Limit & Circulator
Anticipator Setting: 0.2 A
Maximum Safe Operating Pressure (psi): Immersion Well: 255 psi
Maximum Safe Operating Pressure (kPa): Immersion Well: 1757 kPa
Electrical Ratings, Circulator:
At Full Load – 7.4 A @ 120 Vac: 3.7 A @ 240 Vac;
At Locked Rotor – 44.4 A @ 120 Vac: 22.2 A @ 240 Vac
Electrical Rating, Burner:
At Full Load – 7.4 A @ 120 Vac: 3.7 A @ 240 Vac;
At Locked Rotor – 44.4 A @ 120 Vac: 22.2 A @ 240 Vac
Low Voltage – 0.8 A maximum @ 24 Vac
Millivoltage – 0.25 A @ 1/4 to 12 Vdc
Operating Humidity Range (% RH): 0 to 95% RH, non-condensing
Approvals, Underwriters Laboratories Inc.: UL Listed: File No. MP466, Vol. 13, Sec. 2, Guide No. MBPR2.
Approvals, CSA: L8148A, E - File No. 095329
L8148 J - File No. LR1620, Guide No. 400-E-O

Material Number	Insulation Depth	Operating Temperature Range	Differential Temperature	Mounting	Includes
L8148A1017/U	1 1/2" to 3" Insulation	High Limit – 140°F (60°C) to 240°F (116°C)	8°F fixed	Horizontal	Heat Conductive Compound
L8148E1265/U	1 1/2" to 3" Insulation	High Limit – 180°F (82°C) to 240°F (116°C)	15°F fixed	Vertical Mount	Molex® plug for use with vent damper, includes heat-conductive compound.
L8148E1299/U	1 1/2" to 3" Insulation	High Limit – 180°F (82°C) to 240°F (116°C)	15°F fixed	Vertical Mount	50 VA transformer and heat conductive compound. Molex® plug for use with vent damper
L8148J1009/U	1 1/2" to 3" Insulation	High Limit – 120°F (54°C) to 240°F (116°C)	8°F fixed	Horizontal or Vertical	Heat Conductive Compound

Dimensions in inches (millimeters)

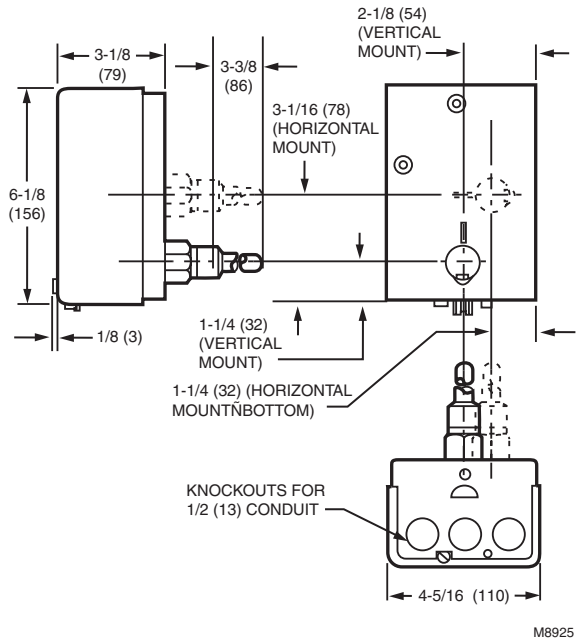

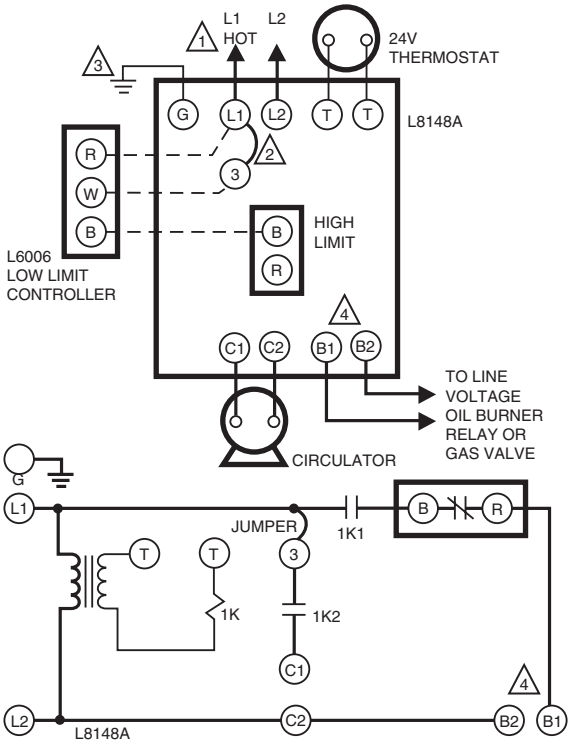

1 POWER SUPPLY. PROVIDE DISCONNECT MEANS AND OVERLOAD PROTECTION AS REQUIRED.

2 REMOVE JUMPER WHEN ADDING L6006 LOW LIMIT CONTROLLER.

3 CONTROL CASE MUST BE CONNECTED TO EARTH GROUND. USE GROUNDING SCREW PROVIDED.

4 B1 IS 1/4 IN. TAB TERMINAL.

M2842A

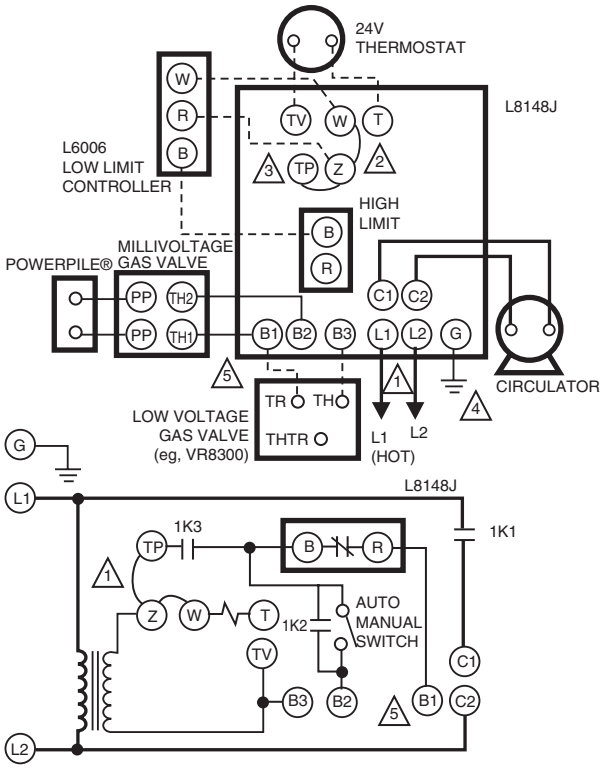

1 POWER SUPPLY. PROVIDE DISCONNECT MEANS AND OVERLOAD PROTECTION AS REQUIRED.

2 REMOVE Z-W JUMPER IF SERIES 60 LOW LIMIT IS USED. WIRE LOW LIMIT CONTROLLER OR ZONE VALVES AS SHOWN. USE WITH 24V (B1-B3) CIRCUIT ONLY.

3 FOR 24V BURNER, WIRE B1-B3 AND USE JUMPER Z-W AND TP-Z. FOR POWERPILE® (MILLIVOLTAGE) GAS VALVES, REMOVE JUMPER TP-Z AND WIRE BURNER B1-B2. JUMPER Z-W REMAINS IN POSITION.

4 CONTROL CASE MUST BE CONNECTED TO EARTH GROUND. USE GROUNDING SCREW PROVIDED.

5 B1 IS 1/4 IN. TAB TERMINAL.

M1793B

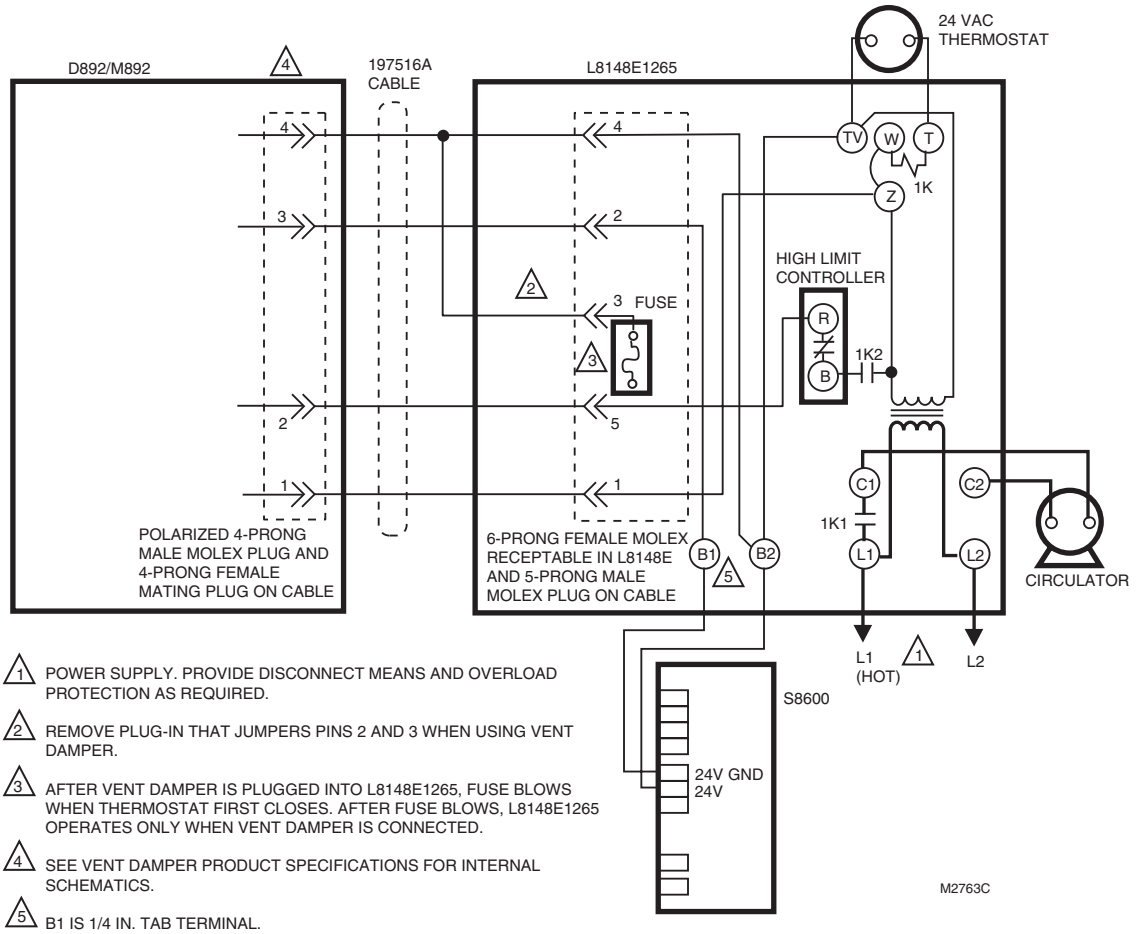

1. POWER SUPPLY. PROVIDE DISCONNECT MEANS AND OVERLOAD PROTECTION AS REQUIRED.
2. REMOVE PLUG-IN THAT JUMPERS PINS 2 AND 3 WHEN USING VENT DAMPER.
3. AFTER VENT DAMPER IS PLUGGED INTO L8148E1265, FUSE BLOWS WHEN THERMOSTAT FIRST CLOSES. AFTER FUSE BLOWS, L8148E1265 OPERATES ONLY WHEN VENT DAMPER IS CONNECTED.
4. SEE VENT DAMPER PRODUCT SPECIFICATIONS FOR INTERNAL SCHEMATICS.
5. B1 IS 1/4 IN. TAB TERMINAL.

Outdoor Reset and Domestic Hot Water Priority

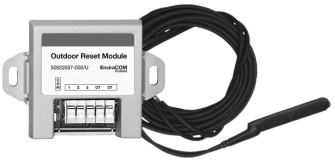

Outdoor reset saves energy by optimizing a boiler's settings based on the actual outdoor temperature. We offer wired and wireless AquaReset® Outdoor Reset solutions. While both versions offer the same incredible energy savings, the Wireless AquaReset® solution installs in only 30 minutes thanks to RedLINK® wireless communication. Compatible with Outdoor Reset-Ready L7224/L7248 Aquastats, S93 Integrated Boiler Controls, and R7910 SOLA Controls.

Domestic Hot Water Priority Kits are used with AquaReset® and available for applications when domestic hot water priority override is needed.

Voltage: 24 Vac
Frequency: 60 Hz
Temperature Range: -30°F to 150°F (-34°C to 66°C)
Mounting: Wall Mounted in any orientation
Operating Temperature Range: -30°F to 150°F (-9°C to 66°C)
Electrical Ratings: 24 Vac, 60 Hz
Operating Humidity Range (% RH): 0 to 95% RH Non-Condensing

Accessories:
C7089R1013/U – Wireless outdoor sensor
C7089U1006/U – Wired outdoor sensor for use in W8735S1000/U

Material Number	Description	Application	Dimensions	Used With	Includes
W8735S1000/U	Outdoor Reset Module for use with L7224/L7248 series 2. Includes outdoor sensor	Wireless Outdoor Reset Module	2.410 in. high x 3.385 in. wide x .920 in deep	L7224; L7248; S9360, S9361, S9380; R7910	C7089U1006 Outdoor Sensor; Outdoor Reset Module
W8735Y1000/U	Outdoor Reset Module for use with L7224/L7248 series 2. Includes outdoor sensor C7089R1013	Wireless Outdoor Reset Kit	5.56 in. high x 4.56 in. wide x 1.25 in deep	L7224; L7248; S9360, S9361, S9380; R7910	C7089R1013

R8182 Combination Protectorelay® and Hydronic Heating Controllers

Immersion type Aquastat® controller and oil burner primary control provides high limit and low limit/circulator control for oil-fired hydronic heating systems.

- Use in intermittent ignition applications.
- Capable of zone control with zone valves.
- Circulator zone control with ZC and ZR terminals on R8182D,E,H,J.
- Flame failure during the running cycle results in a 45 second attempt to restart.
- If unsuccessful, safety shutoff occurs, requiring manual reset before burner can be restarted.
- R8182D,E,F mount directly on burner; R8182H,J mount on 4 x 4 in. junction box and include 5 ft (1.5 m) armored capillary with remote sensor.
- C554A Cadmium Sulfide Flame Detector and a 24 Vac thermostat required.
- Auxiliary ZC and ZR terminals may be used to provide circulator zone control through an R845A Switching Relay.

Voltage: 120 Vac
Power Consumption: 9 W
Frequency: 60 Hz
Temperature Range: Maximum – 250°F (121°C) at element
Operating Temperature Range:
High Limit – 130°F to 240°F (54°C to 116°C);
Low Limit – 110°F to 220°F (43°C to 104°C)
Anticipator Setting: 0.2 A
Maximum Safe Operating Pressure (psi): 200 psi on immersion well; 100 psi direct immersion.
Maximum Safe Operating Pressure (kPa): 1378 kPa on immersion well; 90 kPa direct immersion.

Electrical Ratings, Ignition: 360 VA
Electrical Ratings, Burner:
At Full Load – 4.4 A @ 120 Vac;
At Locked Rotor – 26.4 A @ 120 Vac
Timing: Safety Switch – 45 sec
Dimensions: 7 1/8 in. high x 5 1/4 in. wide x 3 7/16 in. deep. (181 mm high x 133 mm wide x 87 mm deep.)
Operating Humidity Range (% RH): 0 to 95% RH, non-condensing
Approvals, Underwriters Laboratories Inc.: UL Listed: File No. listed: MP268, Vol. 3,4 (R8182D,E,F), Vol. 37 (R8182H,J), Sec. 1.
Approvals, CSA: File No. 095329

Material Number	Differential Temperature	Mounting	Insulation Depth	Includes
R8182D1079/U	High limit: 10°F fixed; Low limit/circulator: 10°F to 25°F adj.	Vertical Mount	1 1/2 in. (38 mm)	Stop dial; Heat Conductive Compound
R8182H1070/U	High limit: 10°F fixed; Low limit/circulator: 10°F to 25°F adj.	Junction box mount	1 1/2 in. (38 mm)	Stop dial; Heat Conductive Compound

Dimensions in inches (millimeters)

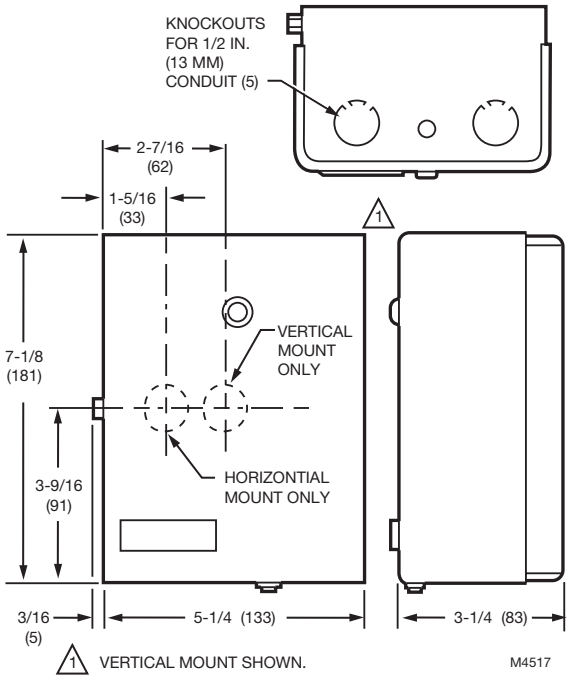

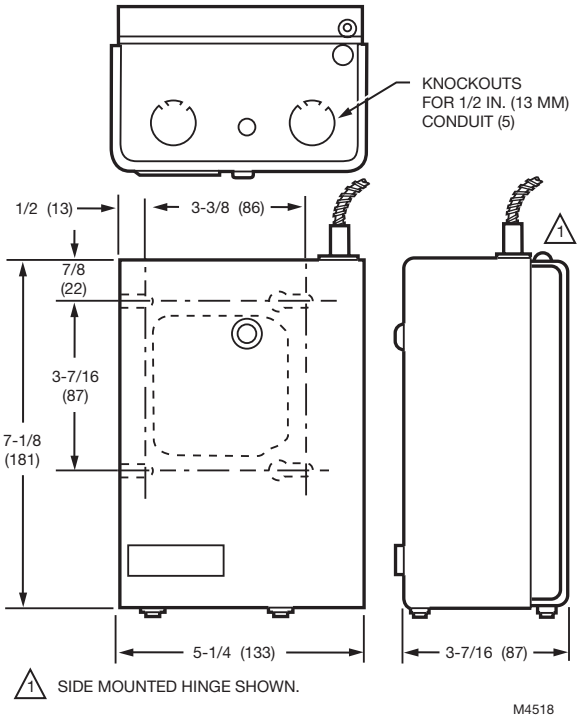

Well Assemblies

Material Number	Materials	Capillary Diameter	Insertion Length	Shell (internal diameter)	Well Spud Size	Insulation Depth	Description	Includes	Used With	
121371A/U	Copper	5/64 in.	3 in.	3/8 in.	1/2 in. - 14 NPT (13 mm - 14 NPT)	1 1/2 in.	Copper. Bulb size: 3/8 in. x 3 in. (10 mm x 76 mm). Well size: 3 in. (76 mm) insertion, 1 1/2 in. NPT. Includes mounting clamp.	Mounting Clamp	–	
121371B/U	Copper	5/64 in.	3 in.	3/8 in.	3/4 in. - 14 NPT (19 mm - 14 NPT)	1 1/2 in.	Copper. Bulb size: 3/8 in. x 3 in. (10 mm x 76 mm). Well size: 3 in. (76 mm) insertion, 1 1/2 in. (38 mm) insulation, 3/4 in. NPT. Includes mounting clamp.	Mounting Clamp	–	
121371L/U	Copper	5/64 in.	3 in.	3/8 in.	1/2 in. - 14 NPT (13 mm - 14 NPT)	3 in.	Copper. Bulb size: 3/8 in. x 3 in. (10 mm x 76 mm). Well size: 3 in. (76 mm) insertion, 3 in. (76 mm) insulation, 1/2 in. NPT. Includes mounting clamp.	Mounting Clamp	–	
121371M/U	Copper	5/64 in.	3 in.	3/8 in.	3/4 in. - 14 NPT (19 mm - 14 NPT)	3 in.	Copper. Bulb size: 3/8 in. x 3 in. (10 mm x 76 mm). Well size: 3 in. (76 mm) insertion, 1 1/2 in. (38 mm) insulation, 3/4 in. NPT. Includes mounting clamp.	Mounting Clamp	–	
123869A/U	Copper	–	3 in.	3/8 in.	1/2 in. - 14 NPT (13 mm - 14 NPT)	1 1/2 in.	Copper. Bulb size: 3/8 in. x 3 in. (10 mm x 76 mm). Well size: 3 in. (76 mm) insertion, 1 1/2 in. (38 mm) insulation, 1/2 in. NPT.	–	–	
123870A/U	Copper	–	3 in.	3/8 in.	3/4 in. - 14 NPT (19 mm - 14 NPT)	1 1/2 in.	Copper. Bulb size: 3/8 in. x 3 in. (10 mm x 76 mm). Well size: 3 in. (76 mm) insertion, 1 1/2 in. (38 mm) insulation, 3/4 in. NPT.	–	L4006; L4081	
123871A/U	Copper	–	3 in.	3/8 in.	3/4 in. - 14 NPT (19 mm - 14 NPT)	3 in.	Copper. Bulb size: 3/8 in. x 3 in. (10 mm x 76 mm). Well size: 3 in. (76 mm) insertion, 3 in. (76 mm) insulation, 3/4 in. NPT.	–	–	
123872A/U	Copper	–	3 in.	3/8 in.	1/2 in. NPT	3 in.	Copper. Bulb size: 3/8 in. x 3 in. (10 mm x 76 mm). Well size: 3 in. (76 mm) insertion, 3 in. (76 mm) insulation, 1/2 in. NPT	–	–	

Single and Multi-function Aquastat Replacement Parts

Material Number	Description	Used With	
120650/U	Heat Conductive Grease 1/2 oz.	Well Assembly	
198799Z/U	Outdoor or Supply sensor with 42 in. lead for AQ475, AQ675 or AQ775	–	
121371AA/U	Well clamp assembly with clamp capillary 21371 (1) screws 804644 and nuts 60156	–	

VC Series Cartridge Cage 3-way Mixing

Control central heating and/or cooling systems, fan coil systems, radiators and convectors. Depending on the model selected, it can be controlled by either a low voltage SPST or SPDT or floating controller such as a room thermostat, Aquastat control, or flow switch.

- Three-way valves.
- Minimal actuator power consumption.
- Double insulated actuator.
- Quick-connect or one-meter cable electrical connections available.
- Safe for use with potable water.
- Quick and easy replacement of moving parts.
- Actuator head installation does not require draining the system.
- On/Off models with six second nominal timing (floating/modulating models available with 120 second timing).

Approximate Dimensions: 3 9/16 in. high x 2 3/4 in. wide x 3 3/4 in. long (111 mm high x 68 mm wide x 89 mm long)
Coupling Controller: Integral
Aux Switch Ratings: 2.2A pilot duty, (5 to 110 Vac)/1.0A (110 to 277 Vac) Inductive; Minimum DC switching capability: 5 mA @ 24 Vac. Class 2, SPDT
Power Supply Rating: 6 VA, SPDT, or SP3T (tri-state) for proportional control.

Differential (close-off) Pressure Rating: 60 psi (4 Bar)
Static Pressure Rating: 300 psi (20 Bar)
Median Temperature Range: 34°F to 203°F (1°C to 95°C)
Ambient Temperature Range: 32°F to 140°F (0°C to 60°C)
Shipping Temperature Range: -40°F to +150°F (-40°C to +65°C)
Materials (Body): Bronze
Use with max 50% glycol in water solution.

Material Number	Supply Voltage	Frequency	Power Consumption	Stroke Timing @60 Hz	End Switch/Control	Internal Auxiliary Switch	Cable Length	Fail Safe Action
VC2114ZZ11/U	24 Vac	60 Hz	6 VA	6 seconds	Two position, SPDT		60 inches	Stay in Place
VC2114ZZ31/U	24 Vac	50 Hz; 60 Hz	6 VA	6 seconds	Two position, SPDT			
VC2714ZZ11/U	24 Vac	60 Hz	6 VA	6 seconds	Two position, SPDT	Yes	60 inches	Stay in Place
VC6834ZZ11/U	24 Vac	50 Hz; 60 Hz	6 VA	120 seconds	SPST (tri-state) Floating; 24 Vac	Yes	60 inches	Stay in Place
VC6930AA1132/U	24 Vac	50 Hz; 60 Hz	6 VA	120 seconds	Trane Valve/Actuator Combo			
VC6930AA1832/U	24 Vac	50 Hz; 60 Hz	6 VA	120 seconds	Trane Valve/Actuator Combo			
VC6930AL1132/U	24 Vac	50 Hz; 60 Hz	6 VA	120 seconds	Trane Valve/Actuator Combo			
VC6930BB1832/U	24 Vac	50 Hz; 60 Hz	6 VA	120 seconds	Trane Valve/Actuator Combo			
VC6930MA6132/U	24 Vac	50 Hz; 60 Hz	6 VA	120 seconds	Trane Valve/Actuator Combo			
VC6930MK6132/U	24 Vac	50 Hz; 60 Hz	6 VA	120 seconds	Trane Valve/Actuator Combo			
VC6930NB6632/U	24 Vac	50 Hz; 60 Hz	6 VA	120 seconds	Trane Valve/Actuator Combo			
VC6930ZZ32/U	24 Vac	50 Hz; 60 Hz	6 VA	120 seconds	Trane Valve/Actuator Combo			
VC6931ZZ11/U	24 Vac	50 Hz; 60 Hz	6 VA	120 seconds	SPST (tri-state) Floating; 24 Vac		39.4 inches	Stay in Place
VC6934NB6132/U	24 Vac	50 Hz; 60 Hz	6 VA	120 seconds	Trane Valve/Actuator Combo			
VC6934NB6532/U	24 Vac	50 Hz; 60 Hz	6 VA	120 seconds	Trane Valve/Actuator Combo			
VC6934NB6832/U	24 Vac	50 Hz; 60 Hz	6 VA	120 seconds	Trane Valve/Actuator Combo			
VC6934ZZ11/U	24 Vac	50 Hz; 60 Hz	6 VA	120 seconds	SPST (tri-state) Floating; 24 Vac		60 inches	Stay in Place
VC7934ZZ11/U	24 Vac	50 Hz; 60 Hz	6 VA	120 seconds	2-10 Vdc, 4-20 mA		60 inches	Stay in Place
VC4011ZZ00/E (Pack of 20)	100-130 Vac	50 Hz; 60 Hz	6 VA	6 seconds	2-Position SPST		39.4 inches	Stay in Place
VC4011ZZ02/E (Pack of 20)	100-130 Vac	50 Hz; 60 Hz	6 VA	6 seconds	2-Position SPST		39.4 inches	Stay in Place
VC4011ZZ11/U	100-130 Vac	50 Hz; 60 Hz	6 VA	6 seconds	2-Position SPST		39.4 inches	Stay in Place
VC4011ZZ11/E (Pack of 20)	100-130 Vac	50 Hz; 60 Hz	6 VA	6 seconds	2-Position SPST		39.4 inches	Stay in Place
VC4013ZZ00/U	240 Vac	50 Hz; 60 Hz	6 VA	6 seconds	2-Position SPST		39.4 inches	Stay in Place
VC4013ZZ11/U	200-240 Vac	50 Hz; 60 Hz	6 VA	6 seconds	2-Position SPST		39.4 inches	Stay in Place
VC4611ZZ11/U	120 Vac	60 Hz	6 VA	6 seconds	2-Position SPST	Yes	39.4 inches	Stay in Place
VC8110ZZ32-549/U	24 Vac	60 Hz	6 VA	6 seconds	2-Position SPST		8 inches	Stay in Place
VC8110ZZ32/E (Pack of 20)	24 Vac	50 Hz; 60 Hz	6 VA	6 seconds	2-Position SPST		8 inches	Stay in Place
VC8110ZZ32/U	24 Vac	50 Hz; 60 Hz	6 VA	6 seconds	2-Position SPST		8 inches	Stay in Place
VC8111ZZ02/E	24 Vac	50 Hz; 60 Hz	6 VA	6 seconds	2-Position SPST		60 inches	Stay in Place
VC8111ZZ11/U	24 Vac	60 Hz	6 VA	6 seconds	2-Position SPST		39.4 inches	Stay in Place
VC8114ZZ11/U	24 Vac	60 Hz	6 VA	6 seconds	2-Position SPST		60 inches	Stay in Place
VC8114ZZ31/U	24 Vac	50 Hz; 60 Hz	6 VA	6 seconds	2-Position SPST		60 inches	Stay in Place
VC8710ZZ03/U	24 Vac	60 Hz	6 VA	6 seconds	2-Position SPSD	Yes	60 inches	Stay in Place
VC8711ZZ11/U	24 Vac	60 Hz	6 VA	6 seconds	2-Position SPST	Yes	39.4 inches	Stay in Place

Motorized Zone Valves

Material Number	Supply Voltage	Frequency	Power Consumption	Stroke Timing @60 Hz	End Switch/Control	Internal Auxiliary Switch	Cable Length	Fail Safe Action
VC8711ZZ11/E (Pack of 20)	24 Vac	60 Hz	6 VA	6 seconds	2-Position SPST	Yes	39.4 inches	Stay in Place
VC8714ZZ11/U	24 Vac	60 Hz	6 VA	6 seconds	2-Position SPST	Yes	60 inches	Stay in Place
VC7931ZZ11/U	24 Vac	50 Hz; 60 Hz	6 VA	120 seconds	2-10 Vdc		39.4 inches	Stay in Place
VC7936ZZ11/U-529	24 Vac	50 Hz; 60 Hz	12 VA	60 to 120 seconds	2-10 Vdc, 4-20 mA, Floating, 2-Position SPDT, 2-Position SPST, Pulse Width Modulation		60 inches	Electronic NO/NC

Valves

Material Number	Body Pattern	Pipe Size		Pipe Connection	Capacity	Flow Characteristic
		Inch	DN			
VCZNB7400/U	Three-way	1/2 in.	DN15	NPT	2.7 Cv	Modified Equal %
VCZMD6100/U	Three-way	1/2 in.	DN15	Inverted Flare	3.2 Cv	Linear
VCZMA6100/U	Three-way	1/2 in.	DN15	Sweat	3.7 Cv	Linear
VCZMA6132/U	Three-way	1/2 in.	DN15	Sweat	3.8 Cv	Linear
VCZMA6532/U	Three-way	1/2 in.	DN15	Sweat	0.6 Cv	Linear
VCZMA6632/U	Three-way	1/2 in.	DN15	Sweat	1.1 Cv	Linear
VCZMD6000/E	Three-way	1/2 in.	DN15	Inverted Flare	3.7 Cv	Linear
VCZNB6100/U	Three-way	1/2 in.	DN15	NPT	3.7 Cv	Linear
VCZNB6000/E	Three-way	1/2 in.	DN15	NPT	4.0 Cv	Linear
VCZMA6000/E	Three-way	1/2 in.	DN15	Sweat	4.2 Cv	Linear
VCZMA6000/U	Three-way	1/2 in.	DN15	Sweat	4.2 Cv	Linear
VCZMK6100/U	Three-way	3/4 in.	DN20	NPT	6.6 Cv	Linear
VCZMK6100/U (Pack of 10)	Three-way	3/4 in.	DN20	NPT	6.6 Cv	Linear
VCZML6100/U	Three-way	3/4 in.	DN20	Sweat	6.6 Cv	Linear
VCZML7100/U	Three-way	3/4 in.	DN20	Sweat	6.6 Cv	Linear
VCZML6000/E	Three-way	3/4 in.	DN20	Sweat	7.5 Cv	Linear
VCZML6000/U	Three-way	3/4 in.	DN20	Sweat	7.5 Cv	Linear
VCZMR6100/U	Three-way	1 in.	DN25	NPT	8.3 Cv	Linear
VCZMS6100/U	Three-way	1 in.	DN25	Sweat	8.3 Cv	Linear
VCZND6100/U	Three-way	1-1/4 in.	DN32	NPT	9.0 Cv	Linear
VCZNE6100/U	Three-way	1-1/4 in.	DN32	Sweat	9.0 Cv	Linear

VC Series Quick Open Cartridge Cage 2-way Zone Valve

Control central heating and/or cooling systems, fan coil systems, radiators and convectors. Depending on the model selected, it can be controlled by either a low voltage SPST or SPDT or floating controller such as a room thermostat, Aquastat control, or flow switch.

- Two-way valves.
- Minimal actuator power consumption.
- Double insulated actuator.
- Quick-connect or one-meter cable electrical connections available.
- Safe for use with potable water.
- Quick and easy replacement of moving parts.
- Actuator head installation does not require draining the system.
- On/Off models with six second nominal timing (floating/modulating models available with 120 second timing).

Approximate Dimensions: 3 9/16 in. high x 2 3/4 in. wide x 3 3/4 in. long (111 mm high x 68 mm wide x 89 mm long)
Coupling Controller: Integral
Aux Switch Ratings: 2.2A pilot duty, (5 to 110 Vac)/1.0A (110 to 277 Vac) Inductive; Minimum DC switching capability: 5 mA @ 24 Vac. Class 2, SPDT
Timing: 6 sec
Control Signal: 24 Vac Floating
Voltage: 24V

Power Supply Rating: 6 VA, SPDT, or SP3T (tri-state) for proportional control.
Differential (close-off) Pressure Rating: 60 psi (4 Bar)
Static Pressure Rating: 300 psi (20 Bar)
Median Temperature Range: 34°F to 203°F (1°C to 95°C)
Ambient Temperature Range: 32°F to 140°F (0°C to 60°C)
Shipping Temperature Range: -40°F to +150°F (-40°C to +65°C)
Materials (Body): Bronze

A La Carte Option

Actuators

Material Number	Voltage	Frequency	Power Consumption	Stroke Timing	End Switch	Cable Length
VC8715ZZ11/U	24 Vac	60 Hz	6 VA	6 seconds	–	60 inches
VC8714ZZ11/U	24 Vac	60 Hz	6 VA	6 seconds	2-Position SPST	60 inches

Valves

Material Number	Body Pattern	Pipe Size		Pipe Connection	Capacity	Flow Characteristic	Comments
		Inch	DN				
VCZBB1100/U	Two-way	1/2 in.	DN15	NPT	3.5 Cv	Quick Open	Use with max 50% glycol in water solution
VCZBB1100/E	Two-way	1/2 in.	DN15	NPT	3.5 Cv	Quick Open	Use with max 50% glycol in water solution (Pack of 10)
VCZAA1000/E	Two-way	1/2 in.	DN15	Sweat	3.5 Cv	Quick Open	Use with max 50% glycol in water solution (Pack of 10)
VCZAA1100/U	Two-way	1/2 in.	DN15	Sweat	3.5 Cv	Quick Open	Use with max 50% glycol in water solution
VCZAA1100/E	Two-way	1/2 in.	DN15	Sweat	3.5 Cv	Quick Open	Use with max 50% glycol in water solution (Pack of 10)
VCZAA1132/U	Two-way	1/2 in.	DN15	Sweat	3.5 Cv	Quick Open	Use with max 50% glycol in water solution (Trane)
VCZAA1432/E	Two-way	1/2 in.	DN15	Sweat	3.5 Cv	Quick Open	Use with max 50% glycol in water solution (Pack of 10)
VCZAA1432/U	Two-way	1/2 in.	DN15	Sweat	3.5 Cv	Quick Open	Use with max 50% glycol in water solution (Trane)
VCZAA1532/U	Two-way	1/2 in.	DN15	Sweat	3.5 Cv	Quick Open	Use with max 50% glycol in water solution (Trane)
VCZAA1600/U	Two-way	1/2 in.	DN15	Sweat	3.5 Cv	Quick Open	Use with max 50% glycol in water solution
VCZAA1632/U	Two-way	1/2 in.	DN15	Sweat	3.5 Cv	Quick Open	Use with max 50% glycol in water solution (Trane)
VCZAE1000/E	Two-way	1/2 in.	DN15	Inverted	3.5 Cv	Quick Open	Use with max 50% glycol in water solution (Pack of 10)
VCZAJ1000/U	Two-way	1/2 in.	DN15	BSPP	3.5 Cv	Quick Open	Use with max 50% glycol in water solution
VCZAL1100/U	Two-way	3/4 in.	DN20	NPT	4.7 Cv	Quick Open	Use with max 50% glycol in water solution
VCZAL1100/E	Two-way	3/4 in.	DN20	NPT	4.7 Cv	Quick Open	Use with max 50% glycol in water solution (Pack of 10)
VCZAM1100/U	Two-way	3/4 in.	DN20	Sweat	4.7 Cv	Quick Open	Use with max 50% glycol in water solution
VCZAM1100/E	Two-way	3/4 in.	DN20	Sweat	4.7 Cv	Quick Open	Use with max 50% glycol in water solution (Pack of 10)
VCZAP1000/U	Two-way	1 in.	DN25	BSPP	7 Cv	Quick Open	Use with max 50% glycol in water solution
VCZAR1100/U	Two-way	1 in.	DN25	NPT	6.6 Cv	Quick Open	Use with max 50% glycol in water solution
VCZAS1100/U	Two-way	1 in.	DN25	Sweat	6.6 Cv	Quick Open	Use with max 50% glycol in water solution
VCZAS1132/U	Two-way	1 in.	DN25	Sweat	6.6 Cv	Quick Open	Use with max 50% glycol in water solution
VCZBD1100/U	Two-way	1-1/4 in.	DN32	NPT	7 Cv	Quick Open	Use with max 50% glycol in water solution
VCZBE1100/U	Two-way	1-1/4 in.	DN32	Sweat	7 Cv	Quick Open	Use with max 50% glycol in water solution

VC Series Linear/Modulating Cartridge Cage 2-way Zone Valve

Control central heating and/or cooling systems, fan coil systems, radiators and convectors. Depending on the model selected, it can be controlled by either a low voltage SPST or SPDT or floating controller such as a room thermostat, Aquastat control, or flow switch.

- Two-way valves.
- Minimal actuator power consumption.
- Double insulated actuator.
- Quick-connect or one-meter cable electrical connections available.
- Safe for use with potable water.
- Quick and easy replacement of moving parts.
- Actuator head installation does not require draining the system.
- On/Off models with six second nominal timing (floating/modulating models available with 120 second timing).

Approximate Dimensions: 3 9/16 in. high x 2 3/4 in. wide x 3 3/4 in. long (111 mm high x 68 mm wide x 89 mm long)
Coupling Controller: Integral
Aux Switch Ratings: 2.2A pilot duty, (5 to 110 Vac)/1.0A (110 to 277 Vac) Inductive; Minimum DC switching capability: 5 mA @ 24 Vac. Class 2, SPDT
Power Supply Rating: 6 VA, SPDT, or SP3T (tri-state) for proportional control.

Differential (close-off) Pressure Rating: 60 psi (4 Bar)
Static Pressure Rating: 300 psi (20 Bar)
Median Temperature Range: 34°F to 203°F (1°C to 95°C)
Ambient Temperature Range: 32°F to 140°F (0°C to 60°C)
Shipping Temperature Range: -40°F to +150°F (-40°C to +65°C)
Materials (Body): Bronze
Use with max 50% glycol in water solution.

A La Carte Option

Actuators

Material Number	Supply Voltage	Frequency	Power Consumption	Stroke Timing @60 Hz	End Switch/Control	Internal Auxiliary Switch	Cable Length	Fail Safe Action
VC2114ZZ11/U	24 Vac	60 Hz	6 VA	6 seconds	2-Position SPDT		60 inches	Stay in Place
VC2714ZZ11/U	24 Vac	60 Hz	6 VA	6 seconds	2-Position SPDT	Yes	60 inches	Stay in Place
VC6834ZZ11/U	24 Vac	50 Hz; 60 Hz	6 VA	120 seconds	SP3T (tri-state) Floating; 24 Vac	Yes	60 inches	Stay in Place
VC6931ZZ11/U	24 Vac	50 Hz; 60 Hz	6 VA	120 seconds	SP3T (tri-state) Floating; 24 Vac		39.4 inches	Stay in Place
VC6934ZZ11/U	24 Vac	50 Hz; 60 Hz	6 VA	120 seconds	SP3T (tri-state) Floating; 24 Vac		60 inches	Stay in Place
VC7934ZZ11/U	24 Vac	50 Hz; 60 Hz	6 VA	120 seconds	2-10 Vdc, 4-20 mA		60 inches	Stay in Place
VC7934ZZ31/U	24 Vac (0-10VDC)	50 Hz; 60 Hz	6 VA	120 seconds	Modulating		39.4 inches plenum cable, 3/8" flex conduit	
VC4011ZZ11/U	100-130 Vac	50 Hz; 60 Hz	6 VA	6 seconds	2-Position SPST		39.4 inches	Stay in Place
VC4013ZZ00/U	240 Vac	50 Hz; 60 Hz	6 VA	6 seconds	2-Position SPST		39.4 inches	Stay in Place
VC4013ZZ11/U	200-240 Vac	50 Hz; 60 Hz	6 VA	6 seconds	2-Position SPST		39.4 inches	Stay in Place
VC4611ZZ11/U	120 Vac	60 Hz	6 VA	6 seconds	2-Position SPST	Yes	39.4 inches	Stay in Place
VC4613ZZ00/E	200-240 Vac	50 Hz; 60 Hz	6 VA	6 seconds	2-Position SPST	Yes	39.4 inches	
VC6011ZZ00/U	100-130 Vac	50 Hz; 60 Hz	6 VA	6 seconds	2-Position SPDT		39.4 inches	
VC8011ZZ00/U	24 Vac	50 Hz	6 VA	6 seconds	2-Position SPST		39.4 inches	
VC8110ZZ03/U	24 Vac	60 Hz	6 VA	6 seconds	2-Position SPST		Molex	
VC8111ZZ11/U	24 Vac	60 Hz	6 VA	6 seconds	2-Position SPST		39.4 inches	Stay in Place
VC8114ZZ11/U	24 Vac	60 Hz	6 VA	6 seconds	2-Position SPST		60 inches	Stay in Place
VC8711ZZ11/U	24 Vac	60 Hz	6 VA	6 seconds	2-Position SPST	Yes	39.4 inches	Stay in Place
VC8714ZZ11/U	24 Vac	60 Hz	6 VA	6 seconds	2-Position SPST	Yes	60 inches	Stay in Place
VC7931ZZ11/U	24 Vac	50 Hz; 60 Hz	6 VA	120 seconds	2-10 Vdc		39.4 inches	Stay in Place
VC6936ZZ11-530	24 Vac	50 Hz; 60 Hz	12 VA	120 seconds	Floating, 2-Position SPDT, Pulse Width Modulation		60 inches	Electronic NO/NC
VC7936ZZ11-529	24 Vac	50 Hz; 60 Hz	12 VA	60 to 120 seconds	2-10 Vdc, 4-20 mA, Floating, 2-Position SPDT, 2-Position SPST, Pulse Width Modulation		60 inches	Electronic NO/NC

Valves

Material Number	Body Pattern	Pipe Size		Pipe Connection	Capacity	Flow Characteristic
		Inch	DN			
VCZBB3500/U	Two-way	1/2 in.	DN15	NPT	0.7 Cv	Modified Equal %
VCZBB3600/U	Two-way	1/2 in.	DN15	NPT	1.3 Cv	Modified Equal %
VCZBB3400/U	Two-way	1/2 in.	DN15	NPT	2.3 Cv	Modified Equal %
VCZAE1100/U	Two-way	1/2 in.	DN15	Inverted Flare	3.2 Cv	Linear
VCZBB1000/U	Two-way	1/2 in.	DN15	NPT	3.5 Cv	Modified Equal %
VCZBB3100/U	Two-way	1/2 in.	DN15	NPT	3.5 Cv	Linear
VCZAA3100/U	Two-way	1/2 in.	DN15	Sweat	3.5 Cv	Linear
VCZAL3400/U	Two-way	3/4 in.	DN20	Sweat	3.9 Cv	Modified Equal %
VCZAM3400/U	Two-way	3/4 in.	DN20	Sweat	3.9 Cv	Modified Equal %
VCZAL3100/U	Two-way	3/4 in.	DN20	NPT	4.7 Cv	Linear
VCZAL1131/U	Two-way	3/4 in.	DN20	NPT	4.7 Cv	Linear
VCZAM1000/E	Two-way	3/4 in.	DN20	Sweat	5.8 Cv	Modified Equal %
VCZAM1000/U	Two-way	3/4 in.	DN20	Sweat	5.8 Cv	Modified Equal %
VCZAL1000/U	Two-way	3/4 in.	DN20	NPT	6.3 Cv	Modified Equal %
VCZAR3100/U	Two-way	1 in.	DN25	NPT	6.6 Cv	Linear
VCZAR1131/U	Two-way	1 in.	DN25	NPT	6.6 Cv	Linear
VCZAS1000/E	Two-way	1 in.	DN25	Sweat	7.0 Cv	Modified Equal %
VCZAR1000/E	Two-way	1 in.	DN25	NPT	7.0 Cv	Modified Equal %
VCZBD3100/U	Two-way	1-1/4 in.	DN32	NPT	7.0 Cv	Linear

Cartridge Cage Valve Accessories

Material Number	Description
40007029-002/U	Wrench for cartridge (included with sweat valves and all replacement cartridges)

VCZZ Valve Replacement Cartridges

Material Number	Description	
VCZZ1000/U	Replacement cartridge, red spring, for VC series 2-way valves, with quick open flow for use w/ 2-position or fail safe proportional actuators. Includes cartridge wrench.	
VCZZ1032/U	Trane version of VCZZ1000	
VCZZ1100/U	Replacement cartridge, red spring, for VC series 2-way valves, with Linear flow for use w/ 2-position or fail safe proportional actuators. Includes cartridge wrench.	
VCZZ1132/U	Trane version of VCZZ1100	
VCZZ1400/U	Replacement cartridge, red spring, for VC series 2-way valves, with Equal Percentage flow for use with fail safe proportional actuators. Includes cartridge wrench.	
VCZZ1432/U	Trane version of VCZZ1400	
VCZZ1500/U	Replacement cartridge, red spring, for VC series 2-way valves, with Equal Percentage Extra Low flow for use with fail safe proportional actuators. Includes cartridge wrench.	
VCZZ1600/U	Replacement cartridge, red spring, for VC series 2-way valves, with Equal Percentage Low flow for use with fail safe proportional actuators. Includes cartridge wrench.	
VCZZ1632/U	Trane version of VCZZ1600	
VCZZ3100/U	Replacement cartridge, red spring, for VC series with Linear flow for proportional control (non-fail safe). Includes cartridge wrench.	
VCZZ3400/U	Replacement cartridge, red spring, for VC series with Equal Percentage flow for proportional control (non-fail safe). Includes cartridge wrench.	
VCZZ3600/U	Replacement cartridge, red spring, for VC series with Equal Percentage Low flow for proportional control (nonfail safe). Includes cartridge wrench.	
VCZZ3800/U	Replacement cartridge, red spring, for VC series with Equal Percentage flow for proportional control (non-fail safe). Includes cartridge wrench.	
VCZZ6000/U	Replacement cartridge, red spring, for VC series 3-way valves, with quick open flow, for use w/2-position actuators. Includes cartridge wrench.	
VCZZ6032/U	Trane version of VCZZ6000	
VCZZ6100/U	Replacement cartridge, red spring, for VC series 3-way valves, with Linear flow, for use w/2-position or fail safe proportional actuators. Includes cartridge wrench.	
VCZZ6132/U	Trane version of VCZZ6100	
VCZZ6432/U	Trane version of VCZZ6400	
VCZZ6532/U	Trane version of VCZZ6500	
VCZZ6632/U	Trane version of VCZZ6600	
VCZZ6832/U	Trane version of VCZZ6800	
VCZZ7100/U	Replacement cartridge, red spring, for VC series with Linear flow for proportional control (non-fail safe). Includes cartridge wrench.	
VCZZ7400/U	Replacement cartridge, red spring, for VC series with Equal Percentage flow for proportional control (non-fail safe). Includes cartridge wrench.	
VCZZ7500/U	Replacement cartridge, red spring, for VC series with Equal Percentage Extra Low flow for proportional control (non-fail safe). Includes cartridge wrench.	
VCZZ7600/U	Replacement cartridge, red spring, for VC series with Equal Percentage Low flow for proportional control (nonfail safe). Includes cartridge wrench.	

V4043 Line Voltage Zone Valves

Flare Connection

Sweat Connection

NPT Connection

Two way on-off line voltage valves consist of an actuator motor and valve assembly for controlling the flow of hot or chilled water.

- Manual opener (on all models, except straight-through, normally open valves) for valve operation on power failure; valve returns to automatic position when power is restored.
- All models may be installed without disassembling the valve.
- Compact construction for easy installation.
- Complete powerhead may be removed or replaced without breaking plumbing line connections or draining the system.
- Motor may be replaced without removing the valve body or draining the system.
- Suitable for heating and cooling applications.

Application: Hydronic Control
Valve Type: Zone Valve
Body Pattern: Two-way, Straight-through
Frequency: 60 Hz
Actuation: Two position
Electrical Connections: 18 in. leads (457 mm leads)
Ambient Temperature Range: 125°F Maximum (52°C Maximum)
Fluid Temperature: 40°F to 200°F (5°C to 93°C)
Static Pressure Rating (psi): 125 psi
Static Pressure Rating (kPa): 862 kPa
Materials (Body): Brass
Materials (Seat): Brass
Materials (Stem): Stainless Steel
Materials (Plug / Ball / Disc): Buna-N (NBR) Rubber Ball
Materials (Packing): EPDM rubber
Timing: Nominal Open – 15 sec
Operating Humidity Range (% RH): 5 to 95% relative humidity, non-condensing.
Approvals, Underwriters Laboratories Inc.: UL Component Listed: File MH11826 Vol. 1
Approvals, CSA: CSA Certified: File 1322
Comments: Use this valve in closed loop hydronic systems that do not contain dissolved oxygen in system water, such as fresh water from frequent source of makeup water. Valve designed for cycling (not constantly powered on) applications.

Material Number	Capacity (Cv)	Capacity (Kv)	Pipe Size (inch)	Pipe Size (DN)	Connection Type	Maximum Differential Pressure Ratings (Close-off) (psi)	Maximum Differential Pressure Ratings (Close-off) (kPa)	De-energized Position	Valve Action	Voltage	Current Draw	Manual Opener
V4043A1002/U	3.5 Cv	3 Kv	1/2 in.	DN15	Flare	20 psi	138 kPa	Normally Closed	Spring return to close	120 Vac; Power Consumption – 9.6 VA	0.08A	Yes
V4043A1010/U	3.5 Cv	3 Kv	1/2 in.	DN15	Sweat	20 psi	138 kPa	Normally Closed	Spring return to close	120 Vac; Power Consumption – 9.6 VA	0.08A	Yes
V4043A1184/U	1 Cv	0.9 Kv	1/2 in.	DN15	Sweat	50 psi	345 kPa	Normally Closed	Spring return to close	120 Vac; Power Consumption – 9.6 VA	0.08A	Yes
V4043A1259/U	8 Cv	6.9 Kv	3/4 in.	DN20	Sweat	8 psi	55 kPa	Normally Closed	Spring return to close	120 Vac; Power Consumption – 9.6 VA	0.08A	Yes
V4043A1317/U	8 Cv	6.9 Kv	1 in.	DN25	Sweat	8 psi	55 kPa	Normally Closed	Spring return to close	120 Vac; Power Consumption – 9.6 VA	0.08A	Yes
V4043A1689/U	3.5 Cv	3 Kv	1/2 in.	DN15	NPT	20 psi	138 kPa	Normally Closed	Spring return to close	120 Vac; Power Consumption – 9.6 VA	0.08A	Yes
V4043A1697/U	10 Cv	8.6 Kv	1 in.	DN25	NPT	6.5 psi	45 kPa	Normally Closed	Spring return to close	120 Vac; Power Consumption – 9.6 VA	0.08A	Yes
V4043A1705/U	3.5 Cv	3 Kv	3/4 in.	DN20	NPT	20 psi	138 kPa	Normally Closed	Spring return to close	120 Vac; Power Consumption – 9.6 VA	0.08A	Yes
V4043B1018/U	3.5 Cv	3 Kv	1/2 in.	DN15	Sweat	20 psi	138 kPa	Normally Open	Spring return to open	120 Vac; Power Consumption – 9.6 VA	0.08A	No

Dimensions in inches (millimeters)

V4043, V8043 SWEAT COPPER CONNECTION MODELS 6

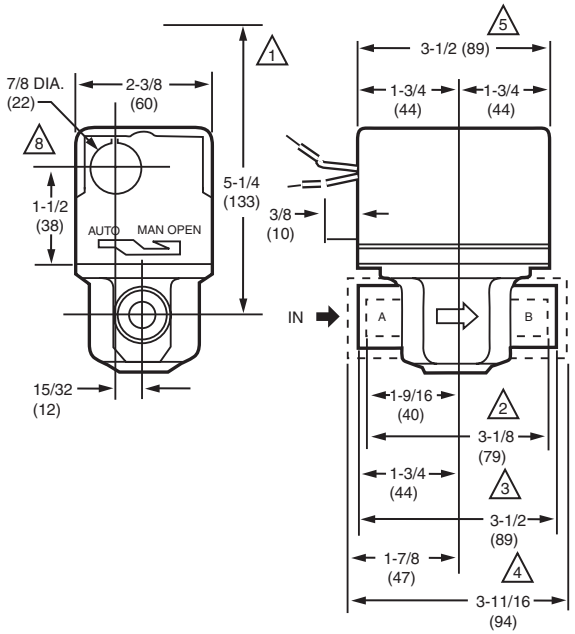

V4044, V8044 SWEAT COPPER CONNECTION MODELS

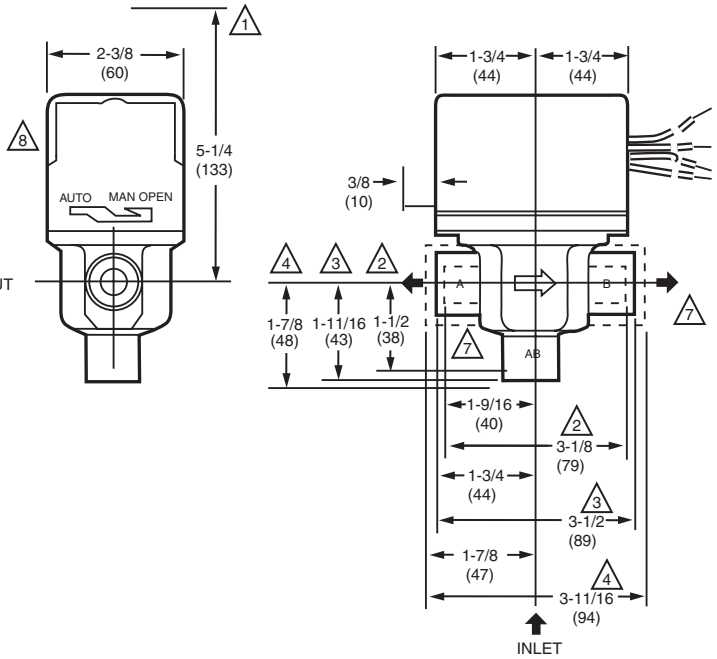

V4043, V8043 FLARE-FITTING MODELS 6

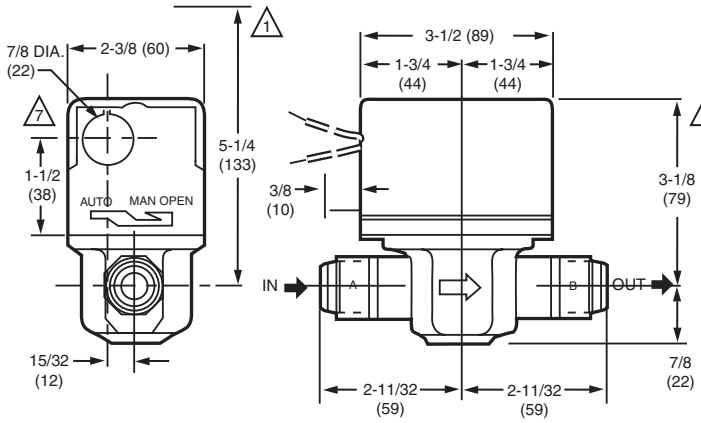

V4044, V8044 FLARE-FITTING MODELS

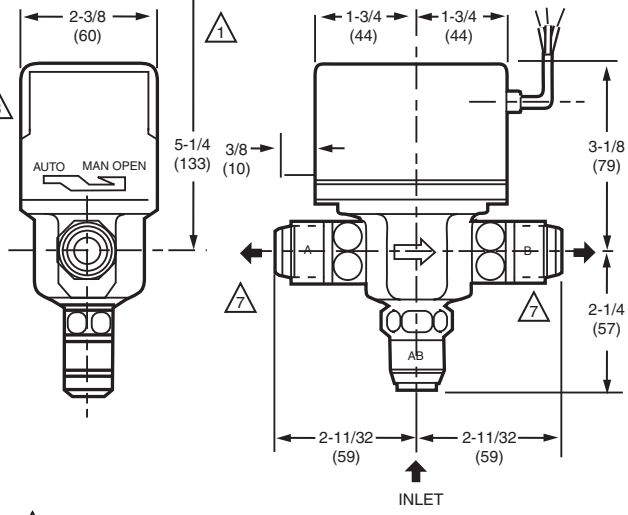

V8043 INVERTED FLARE MODELS

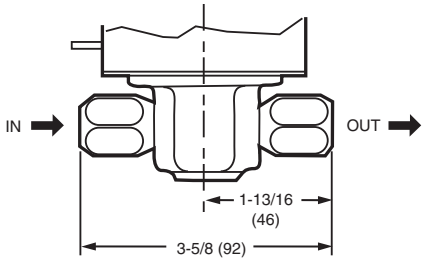

M10175

1. HEIGHT NEEDED TO REMOVE COVER.
2. DIMENSIONS FOR 1/2 IN. COPPER TUBING.
3. DIMENSIONS FOR 3/4 IN COPPER TUBING.
4. DIMENSIONS FOR 1 IN. COPPER TUBING.
5. 4-7/8 IN. (124) MAX ON V8034F WITH TERMINAL BOARD ENCLOSURE.
6. V4034B AND V8043B VALVES THAT ARE NORMALLY OPEN IN THE DE-ENERGIZED POSITION HAVE NO MANUAL LEVER. THE VALVES ALSO HAVE A REVERSED POWERHEAD WHERE THE LEADWIRES EXIT THE POWERHEAD ABOVE THE B (OUTLET) PORT RATHER THAN ABOVE THE A (INLET) PORT.
7. REFER TO MOUNTING INSTRUCTIONS.
8. OPENING FOR 1/2 IN. CONDUIT ON MANUAL LEVER SIDE FOR V4043, V8043; OPENING ON OPPOSITE SIDE FOR V4044, V8044.

V4043 Line Voltage Zone Valves for Steam

Flare Connection

Sweat Connection

Two way on-off line voltage valves consist of an actuator motor and valve assembly for controlling the flow of low pressure steam.

- Manual opener (on all models, except straight-through, normally open valves) for valve operation on power failure; valve returns to automatic position when power is restored.
- All models may be installed without disassembling the valve.
- Compact construction for easy installation.
- Complete powerhead may be removed or replaced without breaking plumbing line connections or draining the system.
- Motor may be replaced without removing the valve body or draining the system.
- Suitable for heating applications.

Application: Steam (low pressure) Control
Valve Type: Zone Valve
Pipe Size (inch): 1/2 in.
Pipe Size (DN): DN15
Body Pattern: Two-way, Straight-through
Capacity (Cv): 3.5 Cv
Capacity (Kv): 3 Kv
Frequency: 60 Hz
Actuation: Two position
Ambient Temperature Range: 125°F Maximum (52°C Maximum)
Fluid Temperature: 40°F to 240°F (5°C to 116°C)
Pressure Range (psi): Steam – 15 psi
Pressure Range (kPa): Steam – 103 kPa
Static Pressure Rating (psi): 125 psi
Static Pressure Rating (kPa): 862 kPa
Materials (Body): Brass
Materials (Seat): Brass
Materials (Stem): Stainless Steel
Materials (Plug / Ball / Disc): EPDM Rubber Ball
Materials (Packing): EPDM rubber
Timing: Nominal Open – 15 sec
Operating Humidity Range (% RH): 5 to 95% relative humidity, non-condensing.
Approvals, Underwriters Laboratories Inc.: UL Component Listed: File MH11826 Vol. 1
Approvals, CSA: CSA Certified: File 1322
Comments: For low pressure (15 psi) steam application
Dimensions in inches (millimeters). See page 68.

Material Number	Electrical Connections	Connection Type	Maximum Differential Pressure Ratings (Close-off) (psi)	Maximum Differential Pressure Ratings (Close-off) (kPa)	De-energized Position	Valve Action	Voltage	Current Draw	Manual Opener
V4043E1003/U	18 in. leads (457 mm leads)	Sweat	20 psi	138 kPa	Normally Closed	Spring return to close	120 Vac; Power Consumption – 9.6 VA	0.08A	Yes
V4043E1011/U	18 in. leads (457 mm leads)	Sweat	20 psi	138 kPa	Normally Closed	Spring return to close	208 Vac; Power Consumption – 9.6 VA	0.04A	Yes

V8043 Low Voltage Normally Open Valves for Steam

NPT Connection

On-off and two way low voltage valves consist of an actuator and valve assembly for controlling the flow of low pressure steam.

- All models may be installed without disassembling the valve.
- Compact construction for easy installation.
- Complete powerhead may be removed or replaced without breaking plumbing line connections or draining the system.
- Actuator motor may be replaced without removing the valve body or draining the system.
- Suitable for use 15 psi low pressure steam application.

Application: Steam (low pressure) Control
Valve Type: Zone Valve
Body Pattern: Two-way, Straight-through
Valve Action: Spring return to open
Voltage: 24 Vac; Power Consumption – 7.7 VA
Frequency: 50 Hz; 60 Hz
Actuation: Two position
Electrical Connections: 18 in. leads (457 mm leads)
Ambient Temperature Range: 125°F Maximum (52°C Maximum)
Fluid Temperature: 50°F to 240°F (10°C to 116°C)
Static Pressure Rating (psi): 125 psi
Static Pressure Rating (kPa): 862 kPa
Materials (Body): Brass
Materials (Seat): Brass
Materials (Stem): Stainless Steel
Materials (Plug / Ball / Disc): EPDM Rubber Ball
Materials (Packing): EPDM rubber
Timing: Nominal Open – 15 sec
Operating Humidity Range (% RH): 5 to 95% relative humidity, non-condensing.
Approximate, Dimensions: 4 in. high x 3 23/32 in. wide x 2 3/8 in. deep (102 mm high x 94 mm wide x 60 mm deep)
Approvals, Underwriters Laboratories Inc.: UL Component Listed: File MH11826 Vol. 1
Comments: For low pressure (15 psi) steam application
Dimensions in inches (millimeters). See page 68.

Material Number	Capacity (Cv)	Capacity (Kv)	Pipe Size (inch)	Pipe Size (DN)	Connection Type	Maximum Differential Pressure Ratings (Close-off) (psi)	Maximum Differential Pressure Ratings (Close-off) (kPa)	De-energized Position	Current Draw	Manual Opener
V8043J1029/U	3.5 Cv	3 Kv	1/2 in.	DN15	NPT	20 psi	138 kPa	Normally Open	0.42A	No
V8043J1037/U	3.5 Cv	3 Kv	3/4 in.	DN20	NPT	20 psi	138 kPa	Normally Open	0.42A	No
V8043J1052/U	3.5 Cv	3 Kv	1 in.	DN25	NPT	20 psi	138 kPa	Normally Open	0.42A	No

V8043 Low Voltage Normally Closed Zone Valves

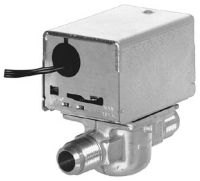

Flare Connection

Sweat Connection

NPT Connection

Sweat Connection with terminal block

Inverted Flare

Press Connection

Two-way on-off low voltage valves consist of an actuator and valve assembly for controlling the flow of hot water.

- Manual opener (on all models, except straight-through, normally open valves) for valve operation on power failure; valve returns to automatic position when power is restored.
- All models may be installed without disassembling the valve.
- Compact construction for easy installation.
- Complete powerhead may be removed or replaced without breaking plumbing line connections or draining the system.
- Actuator motor may be replaced without removing the valve body or draining the system.

Application: Hydronic Control
Valve Type: Zone Valve
Body Pattern: Two-way, Straight-through
Valve Action: Spring return to close
Voltage: 24 Vac; Power Consumption – 7.7 VA
Frequency: 50 Hz; 60 Hz
Actuation: Two position
De-energized Postion: Two position
Ambient Temperature Range: 125°F Maximum (52°C Maximum)
Fluid Temperature: 50°F to 200°F (10°C to 93°C)
Static Pressure Rating (psi): 125 psi
Static Pressure Rating (kPa): 862 kPa
Materials (Body): Brass
Materials (Seat): Brass
Materials (Stem): Stainless Steel
Materials (Plug / Ball / Disc): Buna-N (NBR) Rubber Ball
Materials (Packing): EPDM rubber
Timing: Nominal Open – 15 sec
Operating Humidity Range (% RH): 5 to 95% relative humidity, non-condensing.
Manual Opener: Yes
Approvals, Underwriters Laboratories Inc.: UL Listed: File MH11826
Approvals, CSA: CSA Certified: File 1322
Comments: Use this valve in closed loop hydronic systems that do not contain dissolved oxygen in system water, such as fresh water from frequent source of makeup water. Valve designed for cycling (not constantly powered on) applications.
Current Draw: 0.32A
Dimensions: See page 68. See page 72 for press connection.

Replacement Parts:
802360JA/U – 24V Replacement motor for V8043/44
802360UA/U – 24V, 50/60 Hz Replacement motor for steam and heating Zone Valves

Material Number	Capacity (Cv)	Capacity (Kv)	Pipe Size (inch)	Pipe Size (DN)	Connection Type	Maximum Differential Pressure Ratings (Close-off) (psi)	Maximum Differential Pressure Ratings (Close-off) (kPa)	End Switch Rating	Electrical Connections	Auxiliary End Switch
V8043A1003/U	3.5 Cv	3 Kv	1/2 in.	DN15	Flare	20 psi	138 kPa		18 in. leads (457 mm)	
V8043A1011/U	3.5 Cv	3 Kv	1/2 in.	DN15	Sweat	20 psi	138 kPa		18 in. leads (457 mm)	
V8043A1029/U	3.5 Cv	3 Kv	3/4 in.	DN20	Sweat	20 psi	138 kPa		18 in. leads (457 mm)	
V8043A1037/U	3.5 Cv	3 Kv	1 in.	DN25	Sweat	20 psi	138 kPa		18 in. leads (457 mm)	
V8043A1185/U	8 Cv	6.9 Kv	3/4 in.	DN20	Sweat	8 psi	55 kPa		18 in. leads (457 mm)	
V8043A1193/U	3.5 Cv	3 Kv	1/2 in.	DN15	Inverted Flare	20 psi	138 kPa		18 in. leads (457 mm)	
V8043A1227/U	3.5 Cv	3 Kv	1/2 in.	DN15	NPT	20 psi	138 kPa		18 in. leads (457 mm)	
V8043E1004/U	3.5 Cv	3 Kv	1/2 in.	DN15	Sweat	20 psi	138 kPa	50 VA pilot duty @ 24 V; 4.4 A running with 26.4 A inrush @ 120 V	18 in. leads (457 mm)	N.O. SPST
V8043E1012/U	3.5 Cv	3 Kv	3/4 in.	DN20	Sweat	20 psi	138 kPa	50 VA pilot duty @ 24 V; 4.4 A running with 26.4 A inrush @ 120 V	18 in. leads (457 mm)	N.O. SPST
V8043E1020/U	3.5 Cv	3 Kv	1 in.	DN25	Sweat	20 psi	138 kPa	50 VA pilot duty @ 24 V; 4.4 A running with 26.4 A inrush @ 120 V	18 in. leads (457 mm)	N.O. SPST
V8043E1061/U	8 Cv	6.9 Kv	3/4 in.	DN20	Sweat	8 psi	55 kPa	50 VA pilot duty @ 24 V; 4.4 A running with 26.4 A inrush @ 120 V	18 in. leads (457 mm)	N.O. SPST

Material Number	Capacity (Cv)	Capacity (Kv)	Pipe Size (inch)	Pipe Size (DN)	Connection Type	Maximum Differential Pressure Ratings (Close-off) (psi)	Maximum Differential Pressure Ratings (Close-off) (kPa)	End Switch Rating	Electrical Connections	Auxiliary End Switch
V8043E1079/U	8 Cv	6.9 Kv	1 in.	DN25	Sweat	8 psi	55 kPa	50 VA pilot duty @ 24 V; 4.4 A running with 26.4 A inrush @ 120 V	18 in. leads (457 mm)	N.O. SPST
V8043E1129/U	3.5 Cv	3 Kv	1/2 in.	DN15	Inverted Flare	20 psi	138 kPa	50 VA pilot duty @ 24 V; 4.4 A running with 26.4 A inrush @ 120 V	18 in. leads (457 mm)	N.O. SPST
V8043E1137/U	10 Cv	8.6 Kv	1 in.	DN25	NPT	6.5 psi	45 kPa	50 VA pilot duty @ 24 V; 4.4 A running with 26.4 A inrush @ 120 V	18 in. leads (457 mm)	N.O. SPST
V8043E1145/U	3.5 Cv	3 Kv	3/4 in.	DN20	NPT	20 psi	138 kPa	50 VA pilot duty @ 24 V; 4.4 A running with 26.4 A inrush @ 120 V	18 in. leads (457 mm)	N.O. SPST
V8043F1028/U	3.5 Cv	3 Kv	1/2 in.	DN15	Sweat	20 psi	138 kPa	50 VA pilot duty @ 24 V; 4.4 A running with 26.4 A inrush @ 120 V	screw terminal block	N.O. SPST
V8043F1036/U	3.5 Cv	3 Kv	3/4 in.	DN20	Sweat	20 psi	138 kPa	50 VA pilot duty @ 24 V; 4.4 A running with 26.4 A inrush @ 120 V	screw terminal block	N.O. SPST
V8043F1051/U	3.5 Cv	3 Kv	1 in.	DN25	Sweat	20 psi	138 kPa	50 VA pilot duty @ 24 V; 4.4 A running with 26.4 A inrush @ 120 V	screw terminal block	N.O. SPST
V8043F1093/U	8 Cv	6.9 Kv	3/4 in.	DN20	Sweat	8 psi	55 kPa	50 VA pilot duty @ 24 V; 4.4 A running with 26.4 A inrush @ 120 V	screw terminal block	N.O. SPST
V8043F1101/U	8 Cv	6.9 Kv	1 in.	DN25	Sweat	8 psi	55 kPa	50 VA pilot duty @ 24 V; 4.4 A running with 26.4 A inrush @ 120 V	screw terminal block	N.O. SPST

V8043 Zone Valves with Press Connection (US and Canadian Compliant)

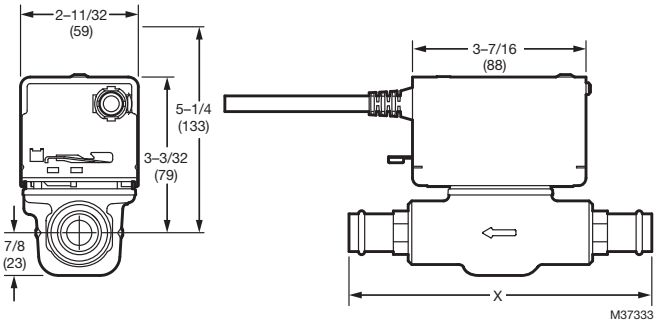

Dimensions (V8043A, V8043E).
Measurements in inches (mm). See Table below.

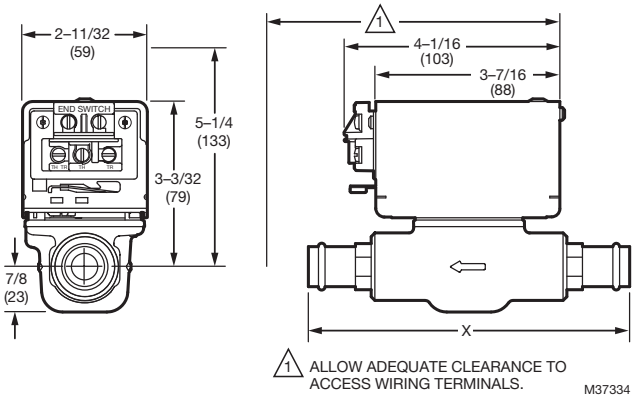

Dimensions (V8043F). Measurements in inches (mm). See Table below.

X dimension. (See dimensional drawings above.)

1/2 in. Valves DN15	3/4 in. Valves DN20	1 in. Valves DN25
6–13/32 in. 163mm	6–25/32 in. 173mm	6–7/8 in. 175mm

Material Number	Capacity (Cv)	Capacity (Kv)	Pipe Size (inch)	Pipe Size (DN)	Connection Type	Maximum Differential Pressure Ratings (Close-off) (psi)	Maximum Differential Pressure Ratings (Close-off) (kPa)	End Switch Rating	Electrical Connections	Auxiliary End Switch
V8043A1311/U	3.0 Cv	3.0 Kv	1/2"	DN15	Pro Press	20 psi	138 kPa		18 in. leads (457 mm)	
V8043A1312/U	3.0 Cv	3.0 Kv	3/4"	DN20	Pro Press	20 psi	138 kPa		18 in. leads (457 mm)	
V8043A1313/U	8.5 Cv	8.5 Kv	1"	DN25	Pro Press	6.5 psi	45 kPa		18 in. leads (457 mm)	
V8043E1411/U	3.0 Cv	3.0 Kv	1/2"	DN15	Pro Press	20 psi	138 kPa	50 VA pilot duty @ 24 V; 4.4 A running with 26.4 A inrush @ 120 V	18 in. leads (457 mm)	N.O. SPST
V8043E1412/U	3.0 Cv	3.0 Kv	3/4"	DN20	Pro Press	20 psi	138 kPa	50 VA pilot duty @ 24 V; 4.4 A running with 26.4 A inrush @ 120 V	18 in. leads (457 mm)	N.O. SPST
V8043E1413/U	8.5 Cv	8.5 Kv	1"	DN25	Pro Press	6.5 psi	45 kPa	50 VA pilot duty @ 24 V; 4.4 A running with 26.4 A inrush @ 120 V	18 in. leads (457 mm)	N.O. SPST
V8043F1511/U	3.0 Cv	3.0 Kv	1/2"	DN15	Pro Press	20 psi	138 kPa	50 VA pilot duty @ 24 V; 4.4 A running with 26.4 A inrush @ 120 V	Screw Block Terminal	N.O. SPST
V8043F1512/U	3.0 Cv	3.0 Kv	3/4"	DN20	Pro Press	20 psi	138 kPa	50 VA pilot duty @ 24 V; 4.4 A running with 26.4 A inrush @ 120 V	Screw Block Terminal	N.O. SPST
V8043F1513/U	8.5 Cv	8.5 Kv	1"	DN25	Pro Press	6.5 psi	45 kPa	50 VA pilot duty @ 24 V; 4.4 A running with 26.4 A inrush @ 120 V	Screw Block Terminal	N.O. SPST

V8043 Low Voltage Normally Closed Zone Valves for Canada

Flare Connection

Sweat Connection

NPT Connection

Sweat Connection with terminal block

Inverted Flare

Two-way on-off low voltage valves consist of an actuator and valve assembly for controlling the flow of hot water.

- Manual opener (on all models, except straight-through, normally open valves) for valve operation on power failure; valve returns to automatic position when power is restored.
- All models may be installed without disassembling the valve.
- Compact construction for easy installation.
- Complete powerhead may be removed or replaced without breaking plumbing line connections or draining the system.
- Actuator motor may be replaced without removing the valve body or draining the system.

Application: Hydronic Control
Valve Type: Zone Valve
Body Pattern: Two-way, Straight-through
Valve Action: Spring return to close
Voltage: 24 Vac; Power Consumption – 7.7 VA
Actuation: Two position
De-energized Position: Normally Closed
Electrical Connections: 18 in. (457 mm) leads (except for V8043F1135/U which has screw terminals)
Ambient Temperature Range: 125°F Maximum (52°C Maximum)
Fluid Temperature: 50°F to 200°F (10°C to 93°C)

Materials (Body): Brass
Materials (Seat): Brass
Materials (Stem): Stainless Steel
Materials (Plug / Ball / Disc): Buna-N (NBR) Rubber Ball
Materials (Packing): EPDM rubber
Timing: Nominal Open – 15 sec
Operating Humidity Range (% RH): 5 to 95% relative humidity, non-condensing.
Manual Opener: Yes
Approvals, Underwriters Laboratories Inc.: UL Listed: File MH11826
Approvals, CSA: CSA Certified: File 1322
Comments: Use this valve in closed loop hydronic systems that do not contain dissolved oxygen in system water, such as fresh water from frequent source of makeup water. Valve designed for cycling (not constantly powered on) applications.
Current Draw: 0.32A
Dimensions in inches (millimeters). See page 68.

Replacement Parts:
802360JA/U – 24V Replacement motor for V8043/44
802360UA/U – 24V, 50/60 Hz Replacement motor for steam and heating Zone Valves

Material Number	Pipe Size (inch)	Pipe Size (DN)	Connection Type	Frequency	Capacity (Cv)	Capacity (Kv)	Auxiliary End Switch	Maximum Differential Pressure Ratings Closeoff (psi [kPa])	Static Pressure Rating (psi [kPa])	End Switch Rating	Includes
V8043C1033/U	3/8 in.	DN10	Flare	50 Hz; 60 Hz	3.5 Cv	3 Kv		20 psi (138 kPa)	125 psi (862 kPa)		With 2 straight 3/4 in. sweat adapters.
V8043C1058/U	3/4 in.	DN20	Sweat	50 Hz; 60 Hz	3.5 Cv	3 Kv		20 psi (138 kPa)	125 psi (862 kPa)		
V8043C1066/U	1 in.	DN25	Sweat	50 Hz; 60 Hz	3.5 Cv	3 Kv		20 psi (138 kPa)	125 psi (862 kPa)		
V8043C1116/U	3/8 in.	DN10	Flare	50 Hz; 60 Hz	3.5 Cv	3 Kv		20 psi (138 kPa)	125 psi (862 kPa)		Less Adapters
V8043C1124/U	1/2 in.	DN15	Inverted Flare	50 Hz; 60 Hz	3.5 Cv	3 Kv		20 psi (138 kPa)	125 psi (862 kPa)		Less Adapters
V8043C3302/U	3/8 in.	DN10	Flare	50 Hz; 60 Hz	3.5 Cv	3 Kv		20 psi (138 kPa)	300 psi (2068 kPa)		With 2 straight 3/4 in. sweat adapters.
V8043C3310/U	1/2 in.	DN15	Inverted Flare	60 Hz	3.5 Cv	3 Kv		20 psi (138 kPa)	300 psi (2068 kPa)		Less Adapters
V8043D3300/U	3/8 in.	DN10	Flare	50 Hz; 60 Hz	3.5 Cv	3 Kv			300 psi (2068 kPa)		With 2 straight 3/4 in. sweat adapters.
V8043D3318/U	1/2 in.	DN15	Inverted Flare	60 Hz	3.5 Cv	3 Kv			300 psi (2068 kPa)		
V8043F1135/U	3/4 in.	DN20	Sweat	50 Hz; 60 Hz	3.5 Cv	3 Kv	N.O. SPST	20 psi (138 kPa)	125 psi (862 kPa)	50 VA pilot duty @ 24 V; 4.4 A running with 26.4 A inrush @ 120 V	End Switch enclosure.
V8043G1000/U	1/2 in.	DN15	Sweat	50 Hz; 60 Hz	3.5 Cv	3 Kv	N.O. SPST	20 psi (138 kPa)	125 psi (862 kPa)	50 VA pilot duty @ 24 V; 4.4 A running with 26.4 A inrush @ 120 V	

Motorized Zone Valves

Material Number	Pipe Size (inch)	Pipe Size (DN)	Connection Type	Frequency	Capacity (Cv)	Capacity (Kv)	Auxiliary End Switch	Maximum Differential Pressure Ratings Closeoff (psi [kPa])	Static Pressure Rating (psi [kPa])	End Switch Rating	Includes
V8043G1018/U	3/4 in.	DN20	Sweat	50 Hz; 60 Hz	3.5 Cv	3 Kv	N.O. SPST	20 psi (138 kPa)	125 psi (862 kPa)	50 VA pilot duty @ 24 V; 4.4 A running with 26.4 A inrush @ 120 V	
V8043G1026/U	1 in.	DN25	Sweat	50 Hz; 60 Hz	3.5 Cv	3 Kv	N.O. SPST	20 psi (138 kPa)	125 psi (862 kPa)	50 VA pilot duty @ 24 V; 4.4 A running with 26.4 A inrush @ 120 V	
V8043G1034/U	3/8 in.	DN10	Flare	50 Hz; 60 Hz	3.5 Cv	3 Kv	N.O. SPST	20 psi (138 kPa)	125 psi (862 kPa)	50 VA pilot duty @ 24 V; 4.4 A running with 26.4 A inrush @ 120 V	With 2 straight 3/4 in. sweat adapters.
V8043G1109/U	3/4 in.	DN20	NPT	50 Hz; 60 Hz	3.5 Cv	3 Kv	N.O. SPST	20 psi (138 kPa)	125 psi (862 kPa)	50 VA pilot duty @ 24 V; 4.4 A running with 26.4 A inrush @ 120 V	
V8043G1125/U	1/2 in.	DN15	Inverted Flare	50 Hz; 60 Hz	3.5 Cv	3 Kv	N.O. SPST	20 psi (138 kPa)	125 psi (862 kPa)	50 VA pilot duty @ 24 V; 4.4 A running with 26.4 A inrush @ 120 V	Less Adapters
V8043G1133/U	3/8 in.	DN10	Flare	50 Hz; 60 Hz	3.5 Cv	3 Kv	N.O. SPST	20 psi (138 kPa)	125 psi (862 kPa)	50 VA pilot duty @ 24 V; 4.4 A running with 26.4 A inrush @ 120 V	Less Adapters
V8043G1158/U	1 in.	DN25	Sweat	50 Hz; 60 Hz	8 Cv	6.9 Kv	N.O. SPST	8 psi (55 kPa)	125 psi (862 kPa)	50 VA pilot duty @ 24 V; 4.4 A running with 26.4 A inrush @ 120 V	
V8043G1182/U	1 in.	DN25	NPT	50 Hz; 60 Hz	10 Cv	8.5 Kv	N.O. SPST	6.5 psi (45 kPa)	125 psi (862 kPa)	50 VA pilot duty @ 24 V; 4.4 A running with 26.4 A inrush @ 120 V	
V8043G3311/U	1/2 in.	DN15	Inverted Flare	60 Hz	3.5 Cv	3 Kv	N.O. SPST	20 psi (138 kPa)	300 psi (2068 kPa)	50 VA pilot duty @ 24 V; 4.4 A running with 26.4 A inrush @ 120 V	Less Adapters

V8043 Low Voltage Normally Open Zone Valves

Sweat Connection

Inverted Flare

Flare Connection

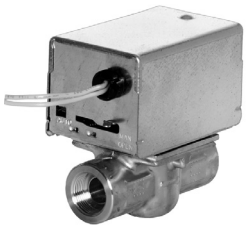

NPT Connection

On-off and two-way low voltage valves consist of an actuator and valve assembly for controlling the flow of hot water.

- All models may be installed without disassembling the valve.
- Compact construction for easy installation.
- Complete powerhead may be removed or replaced without breaking plumbing line connections or draining the system.
- Actuator motor may be replaced without removing the valve body or draining the system.
- No Manual opener

Application: Hydronic Control
Valve Type: Zone Valve
Body Pattern: Two-way, Straight-through
Valve Action: Spring return to open
Voltage: 24 Vac; Power Consumption – 7.7 VA
Capacity (Cv): 3.5 Cv
Capacity (Kv): 3 Kv
Actuation: Two position
De-energized Position: Normally Open
Electrical Connections: 18 in. leads (457 mm leads)
Ambient Temperature Range: 125°F Maximum (52°C Maximum)
Fluid Temperature: 40°F to 200°F (5°C to 93°C)
Maximum Differential Pressure Ratings (Close-off) (psi): 20 psi
Maximum Differential Pressure Ratings (Close-off) (kPa): 138 kPa
Static Pressure Rating (psi): 125 psi
Static Pressure Rating (kPa): 862 kPa
Materials (Body): Brass
Materials (Seat): Brass
Materials (Stem): Stainless Steel
Materials (Plug / Ball / Disc): Buna-N (NBR) Rubber Ball
Materials (Packing): EPDM rubber
Timing: Nominal Open – 15 sec
Operating Humidity Range (% RH): 5 to 95% relative humidity, non-condensing.
Manual Opener: No
Approvals, Underwriters Laboratories Inc.: UL Component Listed: File MH11826 Vol. 1
Approvals, CSA: CSA Certified: File 1322
Comments: Use this valve in closed loop hydronic systems that do not contain dissolved oxygen in system water, such as fresh water from frequent source of makeup water. Valve designed for cycling (not constantly powered on) applications.
Current Draw: 0.32A
Dimensions in inches (millimeters). See page 68.

Material Number	Pipe Size (inch)	Pipe Size (DN)	Connection Type	Frequency	Auxiliary End Switch	End Switch Rating	Includes
V8043B1019/U	1/2 in.	DN15	Sweat	60 Hz			
V8043B1027/U	3/4 in.	DN20	Sweat	60 Hz			
V8043B1076/U	3/4 in.	DN20	NPT	50 Hz; 60 Hz			
V8043D1031/U	3/4 in.	DN20	NPT	50 Hz; 60 Hz			
V8043D1049/U	3/4 in.	DN20	Sweat	50 Hz; 60 Hz			With 1/16 in. bypass hole
V8043D1064/U	3/4 in.	DN20	Sweat	50 Hz; 60 Hz			
V8043D1080/U	3/8 in.	DN10	Flare	50 Hz; 60 Hz			With 2 straight 3/4 in. sweat adapters.
V8043D1156/U	1/2 in.	DN15	Sweat	50 Hz; 60 Hz			
V8043D1197/U	3/8 in.	DN10	Flare	50 Hz; 60 Hz			Less Adapters Order separately - 272704A (1/2 in. sweat), 272704B (3/4 in. sweat)
V8043D1205/U	1/2 in.	DN15	Inverted Flare	50 Hz; 60 Hz			Order adapters separately - 272708A (1/2 in. inverted flare to 1/2 in. sweat adapter), 272708B (1/2 in. inverted flare to 3/4 in. sweat adapter). Valve designed for cycling (not constantly powered on) applications
V8043D1239/U	1/2 in.	DN15	Inverted Flare	50 Hz; 60 Hz	N.C. SPST	2.2 A @ 120Vac 60Hz	Less Adapters

V8043 Low Voltage Series 5000 QuickFit® Zone Valves

Two-way on-off low voltage valves consist of an actuator and valve assembly for controlling the flow of hot water.

- All models may be installed without disassembling the valve.
- Compact construction for easy installation.
- Manual opener (on all models, except straight-through, normally open valves) for valve operation on power failure; valve returns to automatic position when power is restored.
- Complete powerhead may be removed or replaced without breaking plumbing line connections or draining the system.
- "Quick Fit" pushbutton powerhead makes it easy to remove for service.
- Series 5000 replacement powerhead is backward compatible with series 1000 zone valves.
- Innovative motor technology offers silent operation, water hammer resist and longer life.

Application: Hydronic Control
Valve Type: Zone Valve
Body Pattern: Two-way, Straight-through
Valve Action: Spring return to close
Connection Type: Sweat
Voltage: 24 Vac; Power Consumption – 7.2 VA
Frequency: 60 Hz
Actuation: Two position
De-energized Position: Normally Closed
Ambient Temperature Range: 125°F Maximum (52°C Maximum)
Fluid Temperature: 50°F to 200°F (10°C to 93°C)
Static Pressure Rating (psi): 300 psi
Static Pressure Rating (kPa): 2068 kPa
Materials (Body): Brass
Materials (Seat): Brass
Materials (Stem): Stainless Steel
Materials (Plug / Ball / Disc): Buna-N (NBR) Rubber Ball
Materials (Packing): EPDM rubber
Timing: Nominal Open – 15 sec
Operating Humidity Range (% RH): 5 to 95% relative humidity, non-condensing.
Manual Opener: Yes
Approvals, CSA: CSA Certified: File 1322
Comments: Use this valve in closed loop hydronic systems that do not contain dissolved oxygen in system water, such as fresh water from frequent source of makeup water. Valve designed for cycling (not constantly powered on) applications.
Current Draw: 0.32A

Dimensions in inches (millimeters)

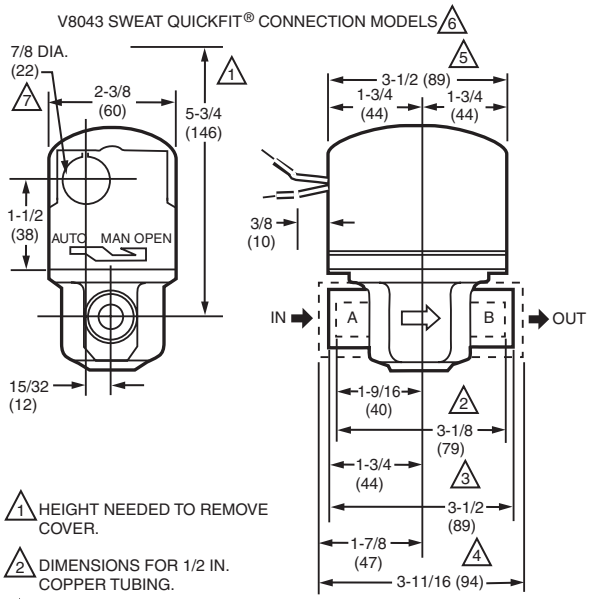

1. HEIGHT NEEDED TO REMOVE COVER.
2. DIMENSIONS FOR 1/2 IN. COPPER TUBING.
3. DIMENSIONS FOR 3/4 IN COPPER TUBING.
4. DIMENSIONS FOR 1 IN. COPPER TUBING.
5. 4-7/8 IN. (124) MAX ON V8034F WITH TERMINAL BOARD ENCLOSURE.
6. V8043B VALVES THAT ARE NORMALLY OPEN IN THE DE-ENERGIZED POSITION HAVE NO MANUAL LEVER. THE VALVES ALSO HAVE A REVERSED POWERHEAD WHERE THE LEADWIRES EXIT THE POWERHEAD ABOVE THE B (OUTLET) PORT RATHER THAN ABOVE THE A (INLET) PORT.
7. OPENING FOR 1/2 IN. CONDUIT ON MANUAL LEVER SIDE FOR V8043

M23257

Material Number	Capacity (Cv)	Capacity (Kv)	Pipe Size (inch)	Pipe Size (DN)	Auxiliary End Switch	Electrical Connections	End Switch Rating	Maximum Differential Pressure Ratings (Close-off) (psi)	Maximum Differential Pressure Ratings (Close-off) (kPa)
V8043A5029/U	3.5 Cv	3 Kv	3/4 in.	DN20		18 in. (457 mm) leads		20 psi	138 kPa
V8043E5004/U	3.5 Cv	3 Kv	1/2 in.	DN15	N.O. SPST	18 in. (457 mm) leads	50 VA pilot duty @ 24 V; 4.4 A running with 26.4 A inrush @ 120 V	20 psi	138 kPa
V8043E5012/U	3.5 Cv	3 Kv	3/4 in.	DN20	N.O. SPST	18 in. (457 mm) leads	50 VA pilot duty @ 24 V; 4.4 A running with 26.4 A inrush @ 120 V	20 psi	138 kPa
V8043E5020/U	3.5 Cv	3 Kv	1 in.	DN25	N.O. SPST	18 in. (457 mm) leads	50 VA pilot duty @ 24 V; 4.4 A running with 26.4 A inrush @ 120 V	20 psi	138 kPa
V8043E5061/U	8 Cv	6.9 Kv	3/4 in.	DN20	N.O. SPST	18 in. (457 mm) leads	50 VA pilot duty @ 24 V; 4.4 A running with 26.4 A inrush @ 120 V	8 psi	55 kPa
V8043E5079/U	8 Cv	6.9 Kv	1 in.	DN25	N.O. SPST	18 in. (457 mm) leads	50 VA pilot duty @ 24 V; 4.4 A running with 26.4 A inrush @ 120 V	8 psi	55 kPa
V8043F5036/U	3.5 Cv	3 Kv	3/4 in.	DN20	N.O. SPST	screw terminal block	50 VA pilot duty @ 24 V; 4.4 A running with 26.4 A inrush @ 120 V	20 psi	138 kPa
V8043F5051/U	3.5 Cv	3 Kv	1 in.	DN25	N.O. SPST	screw terminal block	50 VA pilot duty @ 24 V; 4.4 A running with 26.4 A inrush @ 120 V	20 psi	138 kPa
V8043F5093/U	8 Cv	6.9 Kv	3/4 in.	DN20	N.O. SPST	screw terminal block	50 VA pilot duty @ 24 V; 4.4 A running with 26.4 A inrush @ 120 V	8 psi	55 kPa

V8043 Low Voltage Series 5000 QuickFit® Zone Valves for Canada

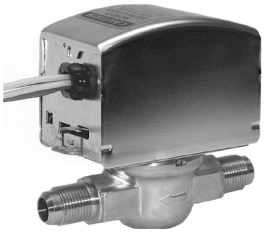

Flare Connection

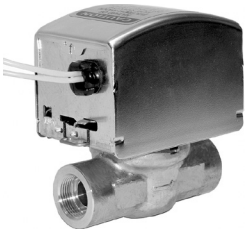

Inverted Flare

Dimensions in inches (millimeters)

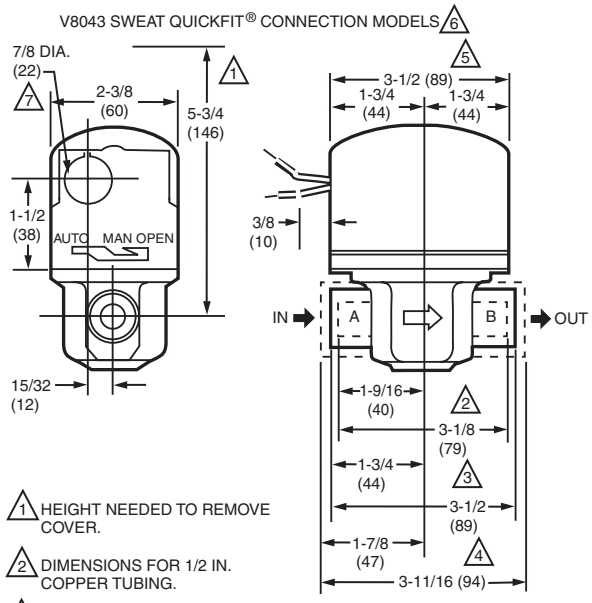

1 HEIGHT NEEDED TO REMOVE COVER.

2 DIMENSIONS FOR 1/2 IN. COPPER TUBING.

3 DIMENSIONS FOR 3/4 IN COPPER TUBING.

4 DIMENSIONS FOR 1 IN. COPPER TUBING.

5 4-7/8 IN. (124) MAX ON V8034F WITH TERMINAL BOARD ENCLOSURE.

6 V8043B VALVES THAT ARE NORMALLY OPEN IN THE DE-ENERGIZED POSITION HAVE NO MANUAL LEVER. THE VALVES ALSO HAVE A REVERSED POWERHEAD WHERE THE LEADWIRES EXIT THE POWERHEAD ABOVE THE B (OUTLET) PORT RATHER THAN ABOVE THE A (INLET) PORT.

7 OPENING FOR 1/2 IN. CONDUIT ON MANUAL LEVER SIDE FOR V8043

M23257

Two-way on-off low voltage valves consist of an actuator and valve assembly for controlling the flow of hot water.

- All models may be installed without disassembling the valve.
- Compact construction for easy installation.
- Manual opener (on all models, except straight-through, normally open valves) for valve operation on power failure; valve returns to automatic position when power is restored.
- Complete powerhead may be removed or replaced without breaking plumbing line connections or draining the system.
- "Quick Fit" pushbutton powerhead makes it easy to remove for service.
- Series 5000 replacement powerhead is backward compatible with series 1000 zone valves.
- Innovative motor technology offers silent operation, water hammer resist and longer life.

Application: Hydronic Control
Valve Type: Zone Valve
Body Pattern: Two-way, Straight-through
Valve Action: Spring return to close
Voltage: 24 Vac; Power Consumption – 7.2 VA
Frequency: 50 Hz; 60 Hz
Capacity (Cv): 3.5 Cv
Capacity (Kv): 3 Kv
Actuation: Two position
De-energized Position: Normally Closed
Auxiliary End Switch: N.O. SPST
Ambient Temperature Range: 125°F Maximum (52°C Maximum)
Fluid Temperature: 50°F to 200°F (10°C to 93°C)
Maximum Differential Pressure Ratings (Close-off) (psi): 20 psi
Maximum Differential Pressure Ratings (Close-off) (kPa): 138 kPa
Static Pressure Rating (psi): 300 psi
Static Pressure Rating (kPa): 2068 kPa
Materials (Body): Brass
Materials (Seat): Brass
Materials (Stem): Stainless Steel
Materials (Plug / Ball / Disc): Buna-N (NBR) Rubber Ball
Materials (Packing): EPDM rubber
Timing: Nominal Open – 15 sec
Operating Humidity Range (% RH): 5 to 95% relative humidity, non-condensing.
End Switch Rating: 50 VA pilot duty @ 24 V; 4.4 A running with 26.4 A inrush @ 120 V
Manual Opener: Yes
Approvals, CSA: CSA Certified: File 1322
Comments: Use this valve in closed loop hydronic systems that do not contain dissolved oxygen in system water, such as fresh water from frequent source of makeup water. Valve designed for cycling (not constantly powered on) applications.
Current Draw: 0.32A

Material Number	Pipe Size (inch)	Pipe Size (DN)	Connection Type	Includes
V8043C5033/U	3/8 in.	DN10	Flare	
V8043C5058/U	3/4 in.	DN20	Sweat	
V8043D5080/U	3/8 in.	DN10	Flare	
V8043G5000/U	1/2 in.	DN15	Sweat	
V8043G5018/U	3/4 in.	DN20	Sweat	
V8043G5034/U	3/8 in.	DN10	Flare	With 2 straight 3/4 in. sweat adapters.
V8043G5125/U	1/2 in.	DN15	Inverted Flare	Less Adapters

V4044 Line Voltage Diverting Valves

Flare Connection

Sweat Connection

On-off and diverting line voltage valves consist of an actuator motor and valve assembly for controlling the flow of hot or chilled water.

- Manual opener (on all models, except straight-through, normally open valves) for valve operation on power failure; valve returns to automatic position when power is restored.
- All models may be installed without disassembling the valve.
- Compact construction for easy installation.
- Complete powerhead may be removed or replaced without breaking plumbing line connections or draining the system.
- Motor may be replaced without removing the valve body or draining the system.
- Suitable for heating and cooling applications.

Application: Hydronic Control
Valve Type: Zone Valve
Body Pattern: Three-way, Diverting
Valve Action: Spring Return to port A
Voltage: 120 Vac; Power Consumption – 9.6 VA
Frequency: 60 Hz
Actuation: Two position
De-energized Position: Port A Normally Closed
Electrical Connections: 18 in. leads (457 mm leads)
Ambient Temperature Range: 125°F Maximum (52°C Maximum)
Fluid Temperature: 40°F to 200°F (5°C to 93°C)
Static Pressure Rating (psi): 125 psi
Static Pressure Rating (kPa): 862 kPa
Materials (Body): Brass
Materials (Seat): Brass

Materials (Stem): Stainless Steel
Materials (Plug / Ball / Disc): Buna-N (NBR) Rubber Ball
Materials (Packing): EPDM rubber
Timing: Nominal Open – 30 sec
Operating Humidity Range (% RH): 5 to 95% relative humidity, non-condensing.
Manual Opener: Yes
Approvals, Underwriters Laboratories Inc.: UL Component Listed: File MH11826 Vol. 1
Comments: Use this valve in closed loop hydronic systems that do not contain dissolved oxygen in system water, such as fresh water from frequent source of makeup water. Valve designed for cycling (not constantly powered on) applications.
Current Draw: 0.08A
Dimensions in inches (millimeters). See page 68.

Material Number	Capacity (Cv)	Capacity (Kv)	Pipe Size (inch)	Pipe Size (DN)	Connection Type	Maximum Differential Pressure Ratings (Close-off) (psi)	Maximum Differential Pressure Ratings (Close-off) (kPa)	Changeover Aquastat
V4044A1001/U	4 Cv	3.4 Kv	1/2 in.	DN15	Flare	20 psi	138 kPa	
V4044A1019/U	4 Cv	3.4 Kv	1/2 in.	DN15	Sweat	20 psi	138 kPa	
V4044A1191/U	7.0 Cv	6 Kv	3/4 in.	DN20	Sweat	10 psi	69 kPa	

V8044 Low Voltage Diverting Valves

Flare Connection

Sweat Connection

NPT Connection

Inverted Flare

On-off and diverting low voltage valves consist of an actuator and valve assembly for controlling the flow of hot water.

- Manual opener (on all models, except straight-through, normally open valves) for valve operation on power failure; valve returns to automatic position when power is restored.
- All models may be installed without disassembling the valve.
- Compact construction for easy installation.
- Complete powerhead may be removed or replaced without breaking plumbing line connections or draining the system.
- Actuator motor may be replaced without removing the valve body or draining the system.

Application: Hydronic Control
Valve Type: Zone Valve
Body Pattern: Three-way, Diverting
Valve Action: Spring Return
Voltage: 24 Vac; Power Consumption – 7.7 VA
Frequency: 50 Hz; 60 Hz
Actuation: Two position
De-energized Position: Port A Normally Closed
Electrical Connections: 18 in. leads (457 mm leads)
Ambient Temperature Range: 125°F Maximum (52°C Maximum)
Fluid Temperature: 40°F to 200°F (5°C to 93°C)
Static Pressure Rating (psi): 125 psi
Static Pressure Rating (kPa): 862 kPa
Materials (Body): Brass
Materials (Seat): Brass
Materials (Stem): Stainless Steel
Materials (Plug / Ball / Disc): Buna-N (NBR) Rubber Ball
Materials (Packing): EPDM rubber
Timing: Nominal Open – 30 sec
Operating Humidity Range (% RH): 5 to 95% relative humidity, non-condensing.
Manual Opener: Yes
Approvals, Underwriters Laboratories Inc.: UL Component Listed: File MH11826 Vol. 1
Approvals, CSA: CSA Certified: File 1322
Comments: Use this valve in closed loop hydronic systems that do not contain dissolved oxygen in system water, such as fresh water from frequent source of makeup water. Valve designed for cycling (not constantly powered on) applications.
Current Draw: 0.32A
Dimensions in inches (millimeters). See page 68.

Material Number	Capacity (Cv)	Capacity (Kv)	Pipe Size (inch)	Pipe Size (DN)	Connection Type	Maximum Differential Pressure Ratings (Close-off) (psi)	Maximum Differential Pressure Ratings (Close-off) (kPa)	Auxiliary End Switch	End Switch Rating
V8044A1002/U	4 Cv	3.4 Kv	1/2 in.	DN15	Flare	20 psi	138 kPa		
V8044A1010/U	4 Cv	3.4 Kv	1/2 in.	DN15	Sweat	20 psi	138 kPa		
V8044A1044/U	7.0 Cv	6 Kv	3/4 in.	DN20	Sweat	10 psi	69 kPa		
V8044A1135/U	4 Cv	3.4 Kv	1/2 in.	DN15	NPT	20 psi	138 kPa		
V8044A1143/U	4 Cv	3.4 Kv	3/4 in.	DN20	NPT	20 psi	138 kPa		
V8044E1003/U	4 Cv	3.4 Kv	1/2 in.	DN15	Sweat	20 psi	138 kPa	N.O. SPST	50 VA pilot duty @ 24 V; 4.4 A running with 26.4 A inrush @ 120 V
V8044E1011/U	7.0 Cv	6 Kv	3/4 in.	DN20	Sweat	10 psi	69 kPa	N.O. SPST	50 VA pilot duty @ 24 V; 4.4 A running with 26.4 A inrush @ 120 V

VU443, VU444; VU843, VU844 Fan Coil Actuators

Humidity resistant fan coil valve actuators are used in conjunction with VU52, VU53 and VU54 valves for controlling the flow of hot or chilled water in commercial HVAC equipment such as fan coil units, terminal reheat coils and convectors.

- Compact construction for easy installation.
- Fits under the cover of most baseboard convectors with actuator fitted to valve body.
- One-button, quick release. Secure 3-point, metal latch to valve body.
- Spring return operation.
- Stainless steel case and aluminum cover. Rust-proof nickel-plated motors available.
- Line or low voltage, rust-resistant motors.
- Manual opener for installation and valve operation on power failure.
- Valve returns to automatic position when power is restored.
- Actuator may be reinstalled or serviced without draining the system or disassembling the valve.
- Slotted conduit hole for faster wiring.

Dimensions in inches (millimeters)

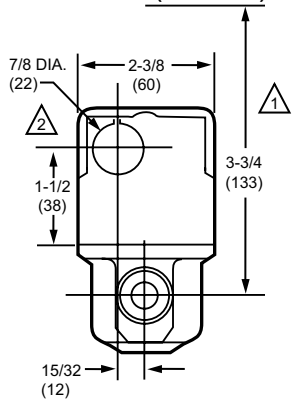

VU53 VALVE WITH VU448 ACTUATOR

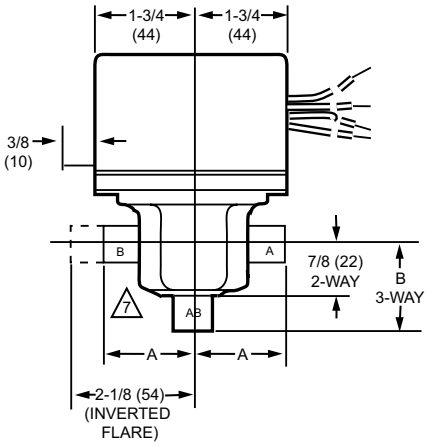

VU53 AND VU54 VALVE WITH ACTUATOR

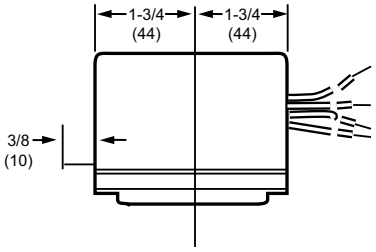

VU5 ACTUATOR

VALVE BODY SIZE	A	B
1/2 IN. SWEAT	1-5/6 (33)	1-5/6 (33)
3/4 IN. SWEAT	1-3/8 (35)	1-11/16 (43)
1 IN. SWEAT	1-11/16 (43)	1-11/16 (43)
1/2 IN. NPT	1-3/8 (35)	1-5/16 (33)
3/4 IN. NPT	1-11/16 (43)	1-7/16 (37)
1 IN. NPT	1-11/16 (43)	1-7/16 (37)

1 HEIGHT NEEDED TO REMOVE ACTUATOR OR COVER

2 OPENING FOR 1/2 IN. CONDUIT ON OPPOSITE SITE OF MANUAL LEVER FOR ALL MODELS.

M18261A

Application: For controlling the flow of hot or chilled water in commercial HVAC equipment such as fan coil units, terminal reheat coils and convectors
Actuator Type: Valve
Control Signal: Two position; SPST
Fail Safe Mode: Spring Return
Electrical Connections: Leads
Power Consumption: Driving – 6 Watts
Timing, Nominal: Driving @ 60 Hz (sec) – 15 sec maximum

Maximum Differential Pressure Ratings (Close-off) (psi): Depends on Cv rating of valve
Manual operation: Lever
Approximate, Dimensions: 2 3/8 in. high, 3 1/2 in. wide, 2 3/8 in. wide (62 mm high, 88 mm wide, 60 mm deep)
Ambient Temperature Range: 34°F to 125°F ambient at 200°F Fluid (1°C to 52°C ambient at 93°C Fluid)
Approvals, CSA: Certified C/US File No. LR1322
Fluid Temperature: 200°F (94°C)

Material Number	Frequency	Internal Auxiliary Switch	Stroke	Spring Return Timing	Materials	Supply Voltage	Electrical Connections Size	Comments	Used With
VU443A1008/U	60 Hz	0	22 deg.	Nominal – 4 sec	Stainless Case, Aluminum Cover	120V	6 in. (0.15 m)		2-way NC VU valve body (VU53)
VU443A1008/B	60 Hz	0	22 deg.	Nominal – 4 sec	Stainless Case, Aluminum Cover	120V	6 in. (0.15 m)	Pack of 20	2-way NC VU valve body (VU53)
VU443A1057/U	60 Hz	0	22 deg.	Nominal – 4 sec	Stainless Case, Aluminum Cover	277V	18 in. (0.5 m)		2-way NC VU valve body (VU53)
VU443A1115/U	50 Hz; 60 Hz	0	22 deg.	Nominal – 4 sec	Stainless Case, Aluminum Cover	230V	6 in. (0.15 m)		2-way NC VU valve body (VU53)
VU444A1007/U	60 Hz	0	45 deg.	Nominal – 6 sec	Stainless Case, Aluminum Cover	120V	6 in. (0.15 m)		2-way NO (VU52) or 3-way VU valve body (VU54)
VU444A1098/U	60 Hz	0	45 deg.	Nominal – 6 sec	Stainless Case, Aluminum Cover	277V	18 in. (0.5 m)		2-way NO (VU52) or 3-way VU valve body (VU54)
VU444A1106/U	50 Hz; 60 Hz	0	45 deg.	Nominal – 6 sec	Stainless Case, Aluminum Cover	230V	6 in. (0.15 m)		2-way NO (VU52) or 3-way VU valve body (VU54)
VU444A1155/U	60 Hz	0	45 deg.	Nominal – 6 sec	Stainless Case, Aluminum cover, Ni-plated motor	120V	6 in. (0.15 m)	Nickel plated motor for added humidity resistance	2-way NO (VU52) or 3-way VU valve body (VU54)
VU842A1046/U	50 Hz; 60 Hz	0	22 deg.	Nominal - 4 sec	Stianless Case, Aluminum cover	24V	8 in. (0.20 m) leadwires with amp connector	Nickel plated motor for added humidity resistance	2-way NO for VU52 or VU54 valve bodies; 2 position AMP
VU843A1004/U	50 Hz; 60 Hz	0	22 deg.	Nominal – 4 sec	Stainless Case, Aluminum Cover	24V	6 in. (0.15 m)	Nickel plated motor for added humidity resistance	2-way NC VU valve body (VU53) VU443, VU444; VU843; VU844 Fan Coil Actuators
VU843A1020/U	50 Hz; 60 Hz	0	22 deg.	Nominal – 4 sec	Stainless Case, Aluminum Cover	24V	8 in. (0.20 m) leadwires with amp connector	Nickel plated motor for added humidity resistance	
VU844A1003/U	50 Hz; 60 Hz	0	45 deg.	Nominal – 6 sec	Stainless Case, Aluminum Cover	24V	6 in. (0.15 m)	Nickel plated motor for added humidity resistance	2-way NO (VU52) or 3-way VU valve body (VU54)
VU844A1003/B (Pack of 20)	50 Hz; 60 Hz	0	45 deg.	Nominal – 6 sec	Stainless Case, Aluminum Cover	24V	6 in. (0.15 m)	Nickel plated motor for added humidity resistance	2-way NO (VU52) or 3-way VU valve body (VU54)
VU844A1045/U	50 Hz; 60 Hz	0	45 deg.	Nominal – 6 sec	Stainless Case, Aluminum Cover	24V	8 in. (0.20 m) leadwires with amp connector	Nickel plated motor for added humidity resistance	
VU844A1060/U	50 Hz; 60 Hz	0	45 deg.	Nominal – 6 sec	Stainless Case, Aluminum cover	24V	6 in. (0.15 m)	Nickel plated motor for added humidity resistance	2-way NO (VU52) or 3-way VU valve body (VU54)

VU52; VU53 Two-way Fan Coil Valves

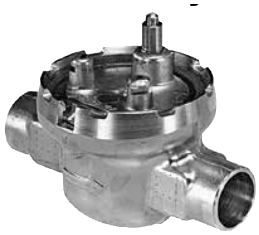

Two-way fan coil zone valves are used to control hot or chilled water in commercial HVAC equipment such as fan coil units, terminal reheat coils and convectors. Not for use in systems containing dissolved oxygen.

- Compact construction for easy installation.
- Fits under the cover of most baseboard convectors with actuator fitted to valve body.
- VU52 and VU53 provide 2-way, straight-through control of water.
- Available in normally closed (VU53) or normally open (VU52) configurations.
- 300 psi (2,000 kPa, PN20) operating pressure rating.
- Patented ball seal provides long service life, soft close off.
- Triple O-ring seal provides three lines of defense against corrosion and water leakage around drive shaft.
- Quick opening flow curve.
- Available with NPT end connections for iron or steel piping.

Dimensions in inches (millimeters)

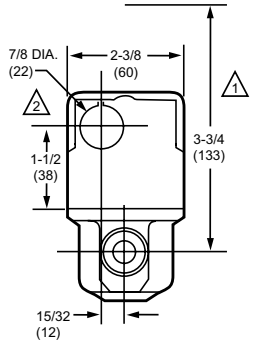

VU53 VALVE WITH VU448 ACTUATOR

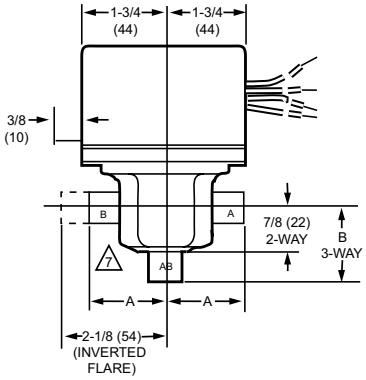

VU53 AND VU54 VALVE WITH ACTUATOR

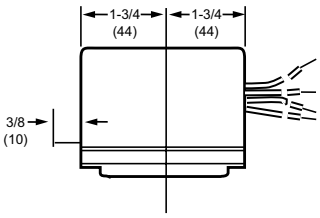

VU5 ACTUATOR

VALVE BODY SIZE	A	B
1/2 IN. SWEAT	1-5/6 (33)	1-5/6 (33)
3/4 IN. SWEAT	1-3/8 (35)	1-11/16 (43)
1 IN. SWEAT	1-11/16 (43)	1-11/16 (43)
1/2 IN. NPT	1-3/8 (35)	1-5/16 (33)
3/4 IN. NPT	1-11/16 (43)	1-7/16 (37)
1 IN. NPT	1-11/16 (43)	1-7/16 (37)

1 HEIGHT NEEDED TO REMOVE ACTUATOR OR COVER

2 OPENING FOR 1/2 IN. CONDUIT ON OPPOSITE SITE OF MANUAL LEVER FOR ALL MODELS.

M18261A

Valve Type: Fan Coil Valve
Body Pattern: Two-way, Straight-through
Valve Action: VU52-Normally Open; VU53-Normally Closed
Controlled Fluid: Chilled or hot water with up to 60% Glycol
Flow Characteristic: Quick Opening
Actuation: Must be purchased separately
Ambient Temperature Range: 34°F to 125°F at 200°F Fluid (1 to 52°C @ 94°C Fluid)
Maximum Safe Operating Pressure (psi): 300 psig
Maximum Safe Operating Pressure (kPa): 2068 kPa
Materials (Body): Brass
Materials (Seat): Brass
Materials (Stem): Brass
Materials (Plug / Ball / Disc): Buna-N rubber
Materials (Packing): EPDM rubber
Approvals, CSA: CSA C/US
Used With: For VU52 use VU444 or VU844 Actuator; For VU53 use VU443 or VU843 Actuator

Material Number	Pipe Size (inch)	Pipe Size (DN)	Capacity (Cv)	Capacity (Kv)	Connection Type	Maximum Differential Pressure Ratings (Close-off) (psi)	Maximum Differential Pressure Ratings (Close-off) (kPa)
VU52N1019/U	1/2 in.	DN15	3.5 Cv	3.0 Kv	Female NPT	20 psi	138 kPa
VU52S2002/U	1/2 in.	DN15	1.0 Cv	0.9 Kv	Sweat	50 psi	345 kPa
VU52S2010/U	1/2 in.	DN15	2.4 Cv	2.1 Kv	Sweat	30 psi	207 kPa
VU52S2028/U	1/2 in.	DN15	3.5 Cv	3.0 Kv	Sweat	20 psi	138 kPa
VU52S2036/U	3/4 in.	DN20	3.5 Cv	3.0 Kv	Sweat	20 psi	138 kPa
VU52S2044/U	3/4 in.	DN20	5.0 Cv	4.3 Kv	Sweat	15 psi	103 kPa
VU53N1009/U	1/2 in.	DN15	3.5 Cv	3.0 Kv	Female NPT	20 psi	138 kPa
VU53N1017/U	3/4 in.	DN20	8.0 Cv	7.0 Kv	Female NPT	10 psi	69 kPa
VU53N1026/U	1 in.	DN25	8.0 Cv	7.0 Kv	Female NPT	10 psi	69 kPa
VU53N1033/U	3/4 in.	DN20	3.5 Cv	3.0 Kv	Female NPT	20 psi	138 kPa
VU53N1041/U	1/2 in.	DN15	1.0 Cv	0.9 Kv	Female NPT	50 psi	345 kPa
VU53S2018/U	1/2 in.	DN15	1.0 Cv	0.9 Kv	Sweat	50 psi	345 kPa
VU53S2026/B (Bulk order)	1/2 in.	DN15	2.4 Cv	2.1 Kv	Sweat	30 psi	207 kPa
VU53S2034/U	1/2 in.	DN15	3.5 Cv	3.0 Kv	Sweat	20 psi	138 kPa
VU53S2042/U	3/4 in.	DN20	3.5 Cv	3.0 Kv	Sweat	20 psi	138 kPa
VU53S2059/B (Bulk order)	3/4 in.	DN20	8.0 Cv	7.0 Kv	Sweat	10 psi	69 kPa

VU54 Three-way Fan Coil Valves

Three-way fan coil zone valves are used to control hot or chilled water in commercial HVAC equipment such as fan coil units, terminal reheat coils and convectors.

- Compact construction for easy installation.
- Fits under the cover of most baseboard convectors with actuator fitted to valve body.
- VU54 provides three-way diverting control of water.
- 300 psi (2,000 kPa, PN20) operating pressure rating.
- Patented ball seal provides long service life, soft close off.
- Triple O-ring seal provides three lines of defense against corrosion and water leakage around drive shaft.
- Quick opening flow curve.
- Choice of NPT end connections for iron or steel piping.

Dimensions in inches (millimeters)

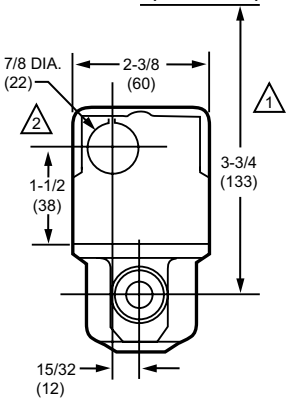

VU53 VALVE WITH VU448 ACTUATOR

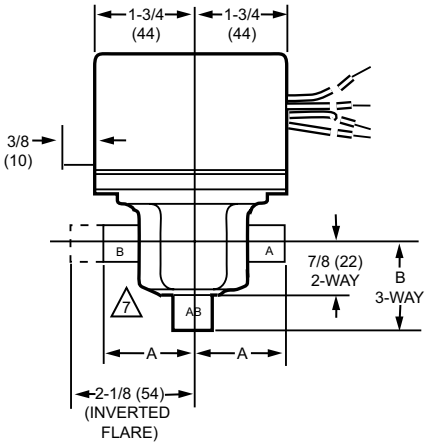

VU53 AND VU54 VALVE WITH ACTUATOR

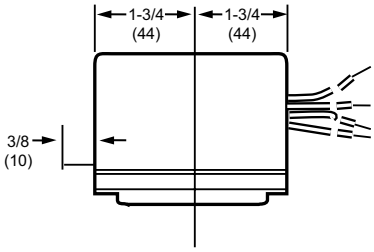

VU5 ACTUATOR

VALVE BODY SIZE	A	B
1/2 IN. SWEAT	1-5/6 (33)	1-5/6 (33)
3/4 IN. SWEAT	1-3/8 (35)	1-11/16 (43)
1 IN. SWEAT	1-11/16 (43)	1-11/16 (43)
1/2 IN. NPT	1-3/8 (35)	1-5/16 (33)
3/4 IN. NPT	1-11/16 (43)	1-7/16 (37)
1 IN. NPT	1-11/16 (43)	1-7/16 (37)

1 HEIGHT NEEDED TO REMOVE ACTUATOR OR COVER

2 OPENING FOR 1/2 IN. CONDUIT ON OPPOSITE SITE OF MANUAL LEVER FOR ALL MODELS.

M18261A

Valve Type: Fan Coil Valve
Body Pattern: Three-way A-AB-B
Valve Action: Diverting
Connection Type: VU54N-Female NPT; VU54S-Sweat
Controlled Fluid: Chilled or hot water with up to 60% Glycol
Flow Characteristic: Quick Opening
Actuation: Must be purchased separately
Ambient Temperature Range: 34°F to 125°F at 200°F Fluid (1 to 52°C @ 94°C Fluid)

Maximum Safe Operating Pressure (psi): 300 psig
Maximum Safe Operating Pressure (kPa): 2068 kPa
Materials (Body): Brass
Materials (Seat): Brass
Materials (Stem): Brass
Materials (Plug / Ball / Disc): Buna-N rubber
Materials (Packing): EPDM rubber
Approvals, CSA: CSA C/US
Used With: VU444 or VU844 Actuator

Material Number	Pipe Size (inch)	Pipe Size (DN)	Capacity (Cv)	Capacity (Kv)	Maximum Differential Pressure Ratings (Close-off) (psi)	Maximum Differential Pressure Ratings (Close-off) (kPa)
VU54N1007/U	1/2 in.	DN15	4.0 Cv	3.4 Kv	20 psi	138 kPa
VU54N1015/B (Bulk pack)	3/4 in.	DN20	7.0 Cv	6.5 Kv	10 psi	69 kPa
VU54S2008/U	1/2 in.	DN15	4.0 Cv	3.4 Kv	20 psi	138 kPa
VU54S2016/U	3/4 in.	DN20	7.0 Cv	6.5 Kv	10 psi	69 kPa
VU54S2016/B (Bulk pack)	3/4 in.	DN20	7.0 Cv	6.5 Kv	10 psi	69 kPa
VU54S2024/U	1 in.	DN25	7.0 Cv	6.5 Kv	10 psi	69 kPa
VU54S2032/U	1/2 in.	DN15	1.5 Cv	1.3 Kv	20 psi	138 kPa
VU54S2040/U	1/2 in.	DN15	3.0 Cv	2.6 Kv	20 psi	138 kPa

Zone Valve Replacement Parts

Material Number	Description	
272704B/U	Two 3/8 in. flare to 3/4 in. sweat adapters	
272708A/U	Two 1/2 in. inverted flare to 1/2 in. sweat adapters	
272708B/U	Two 1/2 in. inverted flare to 3/4 in. sweat adapters	
272708C/U	Two 1/2 in. inverted flare to 1 in. sweat adapters	
272742A/U	in chrono order. Description: Replacement ball and O-ring kit diverter valves	
272748AB/U	24V Replacement motor (international)	
272748ABP/U	24V, 50/60Hz replacement motor for V8043 zone valves	
40003918-006/U	Adaptor kit for V4043, V8043, 2-way hydronic valves	
40003918-007/U	Adaptor kit for V4044, V8044, 3-way diverting valves	
40003918-008/U	Adaptor kit for V4043E, J, V8043J, low pressure steam valves	
40007035-010/U	VC wire harness 3 pin Molex to AMP	
802360JA/U	24V, 50/60Hz replacement motor for V8043 zone valves	
802360LA/U	120V, 60Hz replacement motor for V4043, V4044 zone valves	
802360NA/U	220V/50Hz; 240V/60Hz replacement motor for V4043, V4044 zone valves	
802360QA/U	277V, 60Hz replacement motor for V4043, V4044 zone valves	
802360UA/U	24V, 50/60 Hz Replacement motor for steam and heating Zone Valves	

Zone Valve Replacement Heads

Ambient Temperature Range: 125°F Maximum (52°C Maximum)

Material Number	Description	Electrical Connections	Voltage	Frequency	Auxiliary Switch Ratings	Used With	
40003916-001/U	240V, 50 Hz Replacement actuator for V4043	1 m	240V	50 Hz			
40003916-002/U	240V, 50 Hz Replacement actuator for V4044	1 m	240V	50 Hz			
40003916-003/U	240V, 50 Hz Replacement actuator for V4073	1 m	240V	50 Hz			
40003916-011/U	24V, 60 Hz Replacement actuator for V8043C	18 in. (457 mm) leads on same side of manual lever	24V	60 Hz			
40003916-012/U	24V, 60 Hz Replacement actuator for V8043G	18 in. (457 mm) leads on same side of manual lever	24V	60 Hz			
40003916-013/U	24V, 60 Hz Replacement actuator for V8043F		24V	60 Hz			
40003916-014/U	24V, 60 Hz Replacement actuator for V8043D	18 in. (457 mm) leads on same side of manual lever	24V	60 Hz		Valves with Action of Spring return to open	
40003916-021/U	24 Vac, 50/60 Hz Replacement head for V8043A	18 in. (457 mm) leads on same side of manual lever	24 Vac	50 Hz; 60 Hz		Valves with Action of Spring return to close	
40003916-023/U	240 Vac, 50 Hz Replacement head for V4043A, 240V, 50Hz	18 in. (457 mm) leads on same side of manual lever	240 Vac	50 Hz		Two-way valves; Valves with Action of Spring return to close	
40003916-024/U	120 Vac, 60 Hz Replacement head for V4043A	18 in. (457 mm) leads on same side of manual lever	120 Vac	60 Hz		Two-way valves; Valves with Action of Spring return to close	
40003916-025/U	24 Vac, 50/60 Hz Replacement head with End Switch for V8044E	18 in. (457 mm) leads on same side of manual lever	24 Vac	50 Hz; 60 Hz	4.4 A running @ 120 V; 50 VA pilot duty @ 24 V	Diverting Valves; Valves with Action of Spring return to close "A" port	
40003916-026/U	24 Vac, 50/60 Hz Replacement head with End Switch for V8043E	18 in. (457 mm) leads on same side of manual lever	24 Vac	50 Hz; 60 Hz	4.4 A running @ 120 V; 50 VA pilot duty @ 24 V	Two-way valves; Valves with Action of Spring return to close	
40003916-027/U	24 Vac, 50/60 Hz, N.O. Replacement head for V8043B	18 in. (457 mm) leads on same side of manual lever	24 Vac	50 Hz; 60 Hz		Two-way valves; Valves with Action of Spring return to open	
40003916-031/U	120 Vac, 60 Hz, N.O. Replacement head for V4043B	18 in. (457 mm) leads on same side of manual lever	120 Vac	60 Hz		Two-way valves; Valves with Action of Spring return to open	
40003916-032/U	24 Vac, 50/60 Hz Replacement head for V8044A	18 in. (457 mm) leads on opposite side of manual lever	24 Vac	50 Hz; 60 Hz		Diverting Valves; Valves with Action of Spring return to close "A" port	
40003916-036/U	120 Vac, 60 Hz Replacement head for V4044	18 in. (457 mm) leads on opposite side of manual lever	120V	60 Hz		Diverting Valves; Valves with Action of Spring return to close "A" port	
40003916-046/U	V8044 ACT 24/60 18-in. LW (24V)		24 Vac				
40003916-047/U	V4044A powerhead assembly (120V)		120V				
40003916-048/U	24 Vac, 50/60 Hz Replacement head for V8043F, With End Switch	screw terminal block on same side of manual lever	24 Vac	50 Hz; 60 Hz	4.4 A running @ 120 V; 50 VA pilot duty @ 24 V	Two-way valves; Valves with Action of Spring return to close	
40003916-511/U	24V, 60 Hz Replacement actuator for V8043C "5000" series	18 in. (457 mm) leads on same side of manual lever	24V	60 Hz			
40003916-512/U	24V, 60 Hz Replacement actuator for V8043C "5000" series	18 in. (457 mm) leads on same side of manual lever	24V	60 Hz			
40003916-521/U	24 Vac, 50/60 Hz Replacement head for V8043A 5000 series	18 in. (457 mm) leads on same side of manual lever	24 Vac	50 Hz; 60 Hz		Two-way valves; Valves with Action of Spring return to close	
40003916-526/U	24 Vac, 50/60 Hz Replacement head with End Switch, for V8043E 5000 series	18 in. (457 mm) leads on same side of manual lever	24 Vac	50 Hz; 60 Hz	4.4 A running @ 120 V; 50 VA pilot duty @ 24 V	Two-way valves; Valves with Action of Spring return to close	
40003916-526/Z	24 Vac, 50/60 Hz Replacement head with End Switch, for V8043E 5000 series	18 in. (457 mm) leads on same side of manual lever	24 Vac	50 Hz; 60 Hz	4.4 A running @ 120 V; 50 VA pilot duty @ 24 V	Two-way valves; Valves with Action of Spring return to close	

Motorized Zone Valves

Material Number	Description	Electrical Connections	Voltage	Frequency	Auxiliary Switch Ratings	Used With	
40003916-548/U	24 Vac, 50/60 Hz Replacement head for V8043F, With End Switch	Screw terminal block on same side of manual lever	24 Vac	50 Hz; 60 Hz	4.4 A running @ 120 V; 50 VA pilot duty @ 24 V	Two-way valves; Valves with Action of Spring return to close	
QVU8142A3231/U	N.O. rebuild kit VU52 1/2-in. 1-in.						
QVU8143A3231/U	N.C. rebuild kit VU53 1/2-in. 1-in.						

AquaPUMP Fixed Speed Hydronic Circulating Pumps

The PC3F in-line, wet rotor circulator with universal flange is designed for applications in closed-loop hydronic heating and cooling systems, as well as in solar systems. The pump is non-submersible and for use in dry, frost-free, well-ventilated installations.

- Twist-To-Fit Universal Flange, Rotates 90° to fit most installations with a single product
- Three pump sizes cover every application
- 3-Speed Versatility maximizes efficiency and provides sufficient flow rates with a single pump
- Universal Design replaces wide range of competitive models with just one brand
- Check valves included with each pump

Dimensions in inches (millimeters)

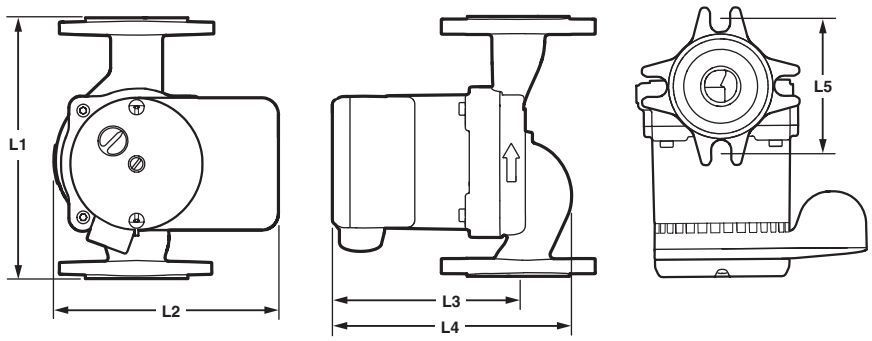

MATERIAL NUMBER	L1	L2	L3	L4	L5
PC3F1558IUF00	6.5 (165.5)	5.5 (140)	4.7 (118)	6.6 (167)	3.2 (80.2)
PC3F2699IUF00	6.5 (165.5)	6.1 (155)	6.5 (165.5)	7.75 (197)	3.2 (80.2)
PC3F4344IUF00	8.5 (216)	6.1 (155)	6.9 (174)	8.9 (227)	3.4 (87.3)

M34725

Voltage: 115V at 60 Hz
Maximum Water Pressure (psi): 145 psi
Ambient Temperature Range: 32°F to 104°F (0°C to 40°C)
Materials: Housing – Cast Iron; Bearings and Shaft – Ceramic

Fluid Temperature: 230°F Maximum (110°C Maximum)
Maximum Noise Rating: Driving (dB(A) @ 1m) – 43
Common Product Name: AquaPUMP
Approvals: CSA & UL

Material Number	Maximum Flow Rate (gpm)	Pressure Head	Approximate, Dimensions (in.)	Current Draw	Description
PC3F1558IUF00/U	15 gpm	19	6-1/2 in. A to B ports End to End	Nominal (minimum speed) – 0.3; Nominal (maximum speed) – 0.75	3-Speed Circulation Pump
PC3F2699IUF00/U	25 gpm	31	6-1/2 in. A to B ports End to End	Nominal (minimum speed) – 1.1; Nominal (maximum speed) – 1.7	3-Speed Circulation Pump
PC3F4344IUF00/U	45 gpm	17	8-1/2 in. A to B ports End to End	Nominal (minimum speed) – 1.1; Nominal (maximum speed) – 1.7	3-Speed Circulation Pump

AquaPUMP Accessories

These accessories work with both PC3F and PCVF models.

Material Number	Fluid Temperature	Approximate, Dimensions (in.)	Description	
PCG100/U	230°F Maximum (110°C Maximum)	1 in.	1 inch Circulating Pump Flange Gasket	
PCG150/U	230°F Maximum (110°C Maximum)	1-1/4 in. 1-1/2 in.	1-1/4 in. and 1-1/2 inch Circulating Pump Flange Gasket	
PCV100/U	200°F Maximum (93°C Maximum)	1 in.	1 inch Circulating Pump Check Valve	
PCV125/U	200°F Maximum (93°C Maximum)	1-1/4 in.	1-1/4 inch Circulating Pump Check Valve	
PCV150/U	200°F Maximum (93°C Maximum)	1-1/2 in.	1-1/2 inch Circulating Pump Check Valve	

Flow Curves

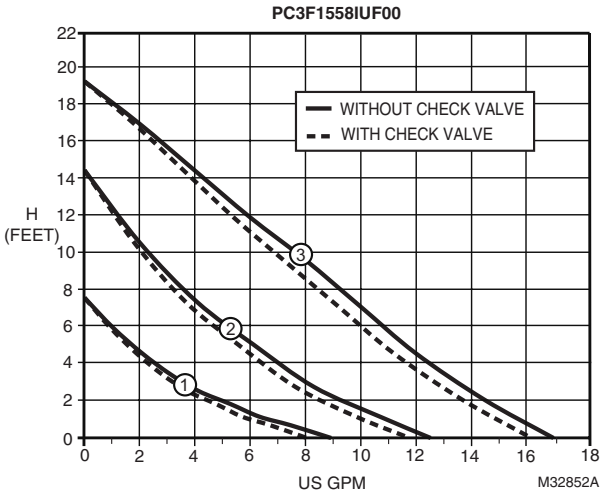
PC3F1558IUF00
WITHOUT CHECK VALVE
WITH CHECK VALVE
H
(FEET)
US GPM
M32852A

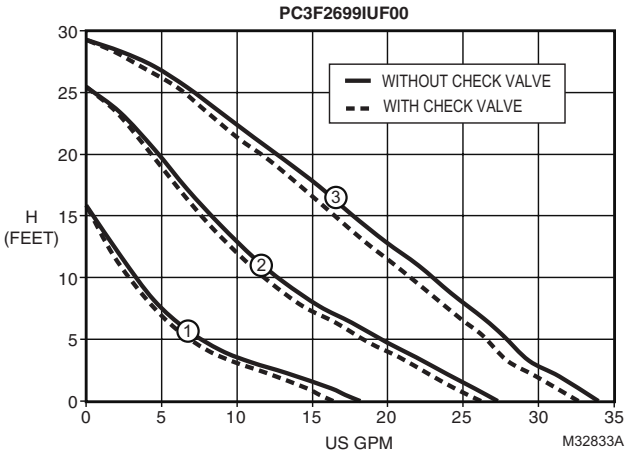
PC3F2699IUF00
WITHOUT CHECK VALVE
WITH CHECK VALVE
H
(FEET)
US GPM
M32833A

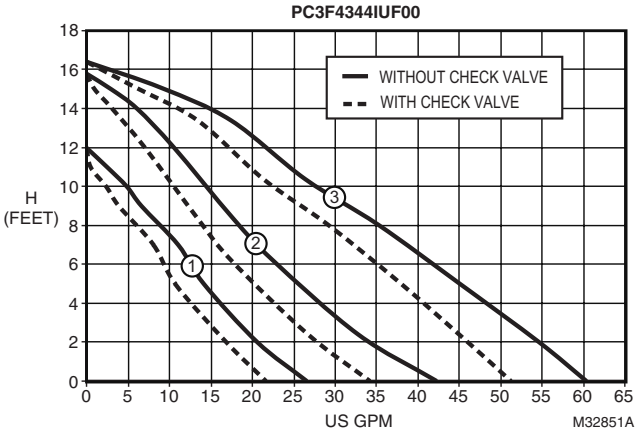
PC3F4344IUF00
WITHOUT CHECK VALVE
WITH CHECK VALVE
H
(FEET)
US GPM
M32851A

AquaPUMP Variable Speed Hydronic Circulating Pumps

PCVF-ECM2020/U

PCVF-ECM2020-LF/U

The Resideo AquaPUMP Variable speed, in-line, wet rotor circulator is designed for variable or constant pressure applications in closed-loop hydronic heating and cooling systems, as well as open circulation systems (stainless steel model).

- Available in Cast Iron and Stainless Steel
- Five different modes of operation utilizing pressure responsive control which covers a wide range of performance
- Quiet operating ECM reducing energy consumption, operational noise, and vibrations
- Universal Design replaces wide range of competitive models with just one brand
- Check valves included with each pump

Control:
Variable or fixed speed
Multi-select pressure sensing operation
0-10VDC external operation
Motor Protection: The motor includes an internal thermal overload protection. External motor protection is not required.
Maximum Fluid Temperature: 230 °F (110 °C) maximum
Maximum Working Pressure: 150 psi (10 bar).
Maximum Relative Air Humidity (rh): 95%
Standards: Insulation Class H

Certification: ETL listed for US and Canada (conforms to ULSTD.778 certified to CSA STD. C22.2 No.108-01)
*NSF/ANSI 372 (for stainless steel models)
Body: Cast iron (closed systems), stainless steel (open systems)
Motor Housing: Aluminum
Impeller: Noryl
Shaft: Ceramic
O-Ring/Flange Gaskets: EPDM rubber
Bearings: Ceramic
Bearings Plate: Stainless steel
Motor Cap: Stainless steel

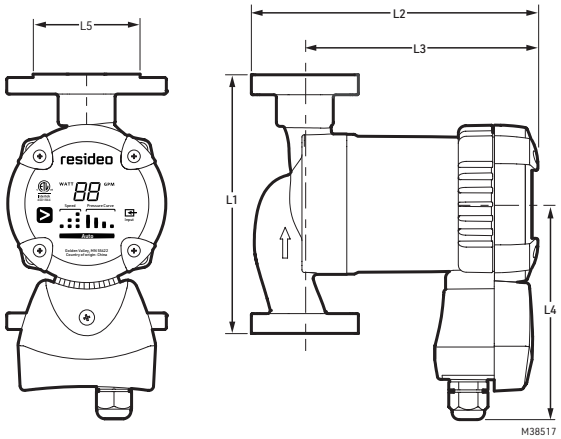

Material Number	Max. Flow		Pressure Head		Connections		Weight lbs. (kg)	Dimensions				
	GPM	LPM	Feet	Meters	Bolt Hole Spacing	Bolt Hole		L1 in. (mm)	L2 in. (mm)	L3 in. (mm)	L4 in. (mm)	L5 in. (mm)
PCVF-ECM2020/U	20	75.7	20	6	3-5/32 in. (80.2 mm)	1/2 in. (12.7 mm)	8.0 (3.6)	6.5 (165)	7.08 (180)	5.75 (146)	5.31 (135)	3.25 (80)
PCVF-ECM2020-LF/U	20	75.7	20	6	3-5/32 in. (80.2 mm)	1/2 in. (12.7 mm)	8.0 (3.6)	6.5 (165)	7.08 (180)	5.75 (146)	5.31 (135)	3.25 (80)

AquaPUMP Accessories

These accessories work with both PC3F and PCVF models.

Material Number	Fluid Temperature	Approximate, Dimensions (in.)	Description	
PCG100/U	230°F Maximum (110°C Maximum)	1 in.	1 inch Circulating Pump Flange Gasket	
PCG150/U	230°F Maximum (110°C Maximum)	1-1/4 in. 1-1/2 in.	1-1/4 in. and 1-1/2 inch Circulating Pump Flange Gasket	
PCV100/U	200°F Maximum (93°C Maximum)	1 in.	1 inch Circulating Pump Check Valve	
PCV125/U	200°F Maximum (93°C Maximum)	1-1/4 in.	1-1/4 inch Circulating Pump Check Valve	
PCV150/U	200°F Maximum (93°C Maximum)	1-1/2 in.	1-1/2 inch Circulating Pump Check Valve	

Technical Data

Supply Voltage: 1 x 115 V – 10%/6%

Table 3. Supply Voltage.

	Minimum	Maximum
Amp	0.05	0.72
Watt	5	45

Inlet Pressure:
Minimum inlet pressure in relation to liquid temperature.

Table 4. Inlet Pressure.

Liquid Temperature	Minimum Inlet Pressure
150 ºF (65 ºC)	3.0 ft (0.91 m)
167 ºF (75 ºC)	4.4 ft (1.34 m)
194 ºF (90 ºC)	9.2 ft (2.8 m)
230 ºF (110 ºC)	36.1 ft (11 m)

Operating Temperatures:
To avoid condensation in the control box and stator, the liquid temperature must always be higher than the ambient temperature.

Table 5. Operating Temperatures.

Ambient Temperature	Liquid Temperature	
	Minimum	Maximum
32 ºF (0 ºC)	35.6 ºF (2 ºC)	230 ºF (110 ºC)
50 ºF (10 ºC)	50 ºF (10 ºC)	230 ºF (110 ºC)
68 ºF (20 ºC)	68 ºF (20 ºC)	230 ºF (110 ºC)
86 ºF (30 ºC)	86 ºF (30 ºC)	230 ºF (110 ºC)
95 ºF (35 ºC)	95 ºF (35 ºC)	194 ºF (90 ºC)
104 ºF (40 ºC)	104 ºF (40 ºC)	176 ºF (80 ºC)

Display:

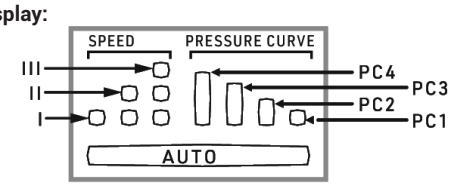

LIGHTS ON THE DISPLAY INDICATE THE CONTROL MODE SELETED.

M38515

PCVF-ECM2020 Performance Curves:

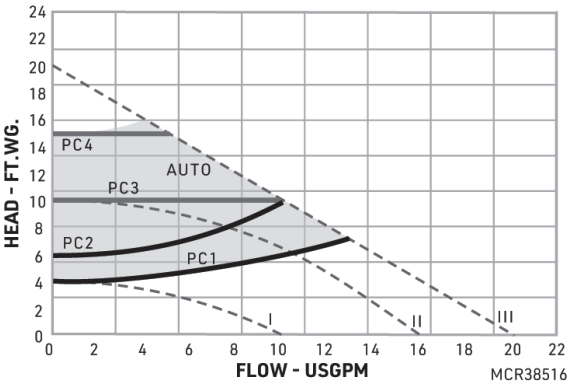

AUTO: Circulator adapts to system demand over time.
PC1: Lowest proportional-pressure curve
PC2: Highest proportional-pressure curve
PC3: Lowest constant-pressure curve
PC4: Highest constant pressure curve
III: Highest constant speed
II: Medium constant speed
I: Lowest constant speed

0 – 10 VDC Operation:

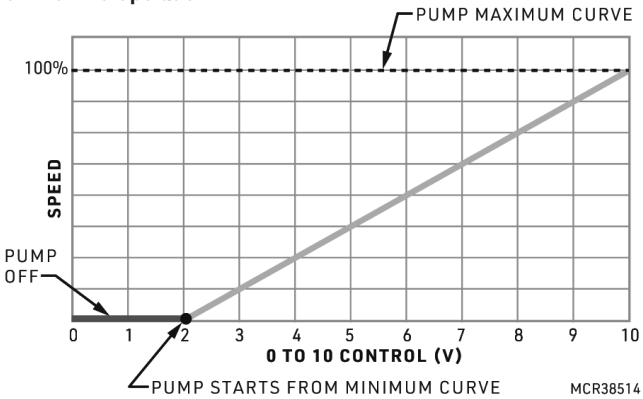

D146 Differential Pressure Regulators

The differential pressure regulator eliminates excessive pump head pressure, when most radiator valves are closed due to reduced demand, by controling flow through a bypass line when the difference between supply/return exceeds the setpoint.

- Install between supply and return sides of a hydronic system to stabilize pressure differential and reduce the effects of demand changes.
- Control maintains a constant differential between the two sides by opening a bypass whenever the difference between supply and return reaches the setpoint.
- Provides silent, trouble-free service.
- Easy installation; requires no electrical hookup.
- Easy adjustment of pressure by turning regulating cap.
- Built-in differential pressure indicator.
- Brass valve body with thermoplastic and stainless steel parts.
- Diaphragm of EPDM.

Valve Type: Pressure Regulating Valve
Connection Type: Angle type, female threaded NPT
Materials (Body): Brass (body), Stainless steel and engineered thermoplastics. EPDM diaphragm.

Outlet Pressure Adjustment Range (psi): 0-17 psi
Max. Inlet Pressure Rating (psi): 85 Psi
Operating Temperature Range: 230°F Maximum (110°C Maximum)

D146 Capacities

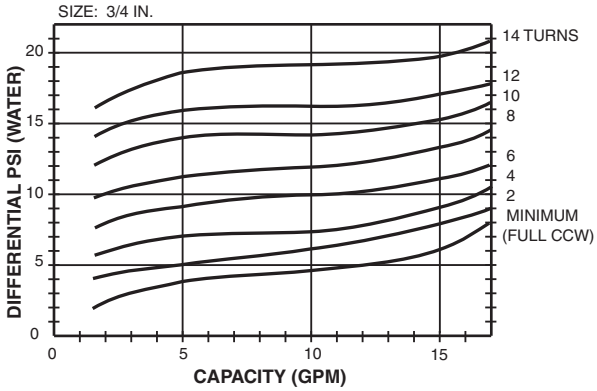

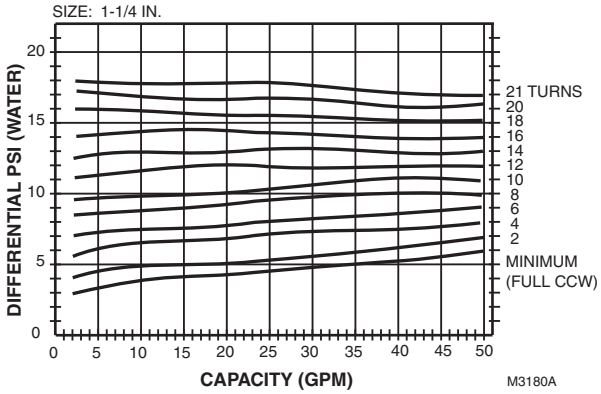

Material Number	Pipe Size (inch)	Pipe Size (DN)	Capacity	Approximate, Dimensions	Description	Includes
D146M1032	3/4 in.	DN20	120,000 Btu/hr; 18 gpm	6 1/4 in. high x 3 3/8 in. wide (160 mm high x 86 mm wide)	Differential Pressure Regulator, 3/4 in.	Built-in differential pressure indicator
D146M1040	1 1/4 in.	DN32	395,000 Btu/hr; 50 gpm	8 1/2 in. high x 4 1/4 in. wide (213 mm high x 109 mm wide)	Differential Pressure Regulator, 1 1/4in.	Built-in differential pressure indicator

EA79 Industrial Air Vents

The EA79 Industrial Air Vent purges air from high pressure mains and equipment in hot or cold closed water systems.

- Built-in shutoff valve for servicing without system shutdown.
- Built-in vacuum breaker.
- Removable float/valve assembly for easy servicing.
- Safety drain connection and vent cap with leakage guard.
- Brass shell construction.
- Internal parts made of corrosion-resistant and chemical-resistant materials for use with water systems containing propylene glycol, mineral oils, or petroleum-based oils. Replaces Hoffman # 79 or Dole # 75 Vents.
- Maintains quiet and efficient operation.

Dimensions in inches (millimeters)

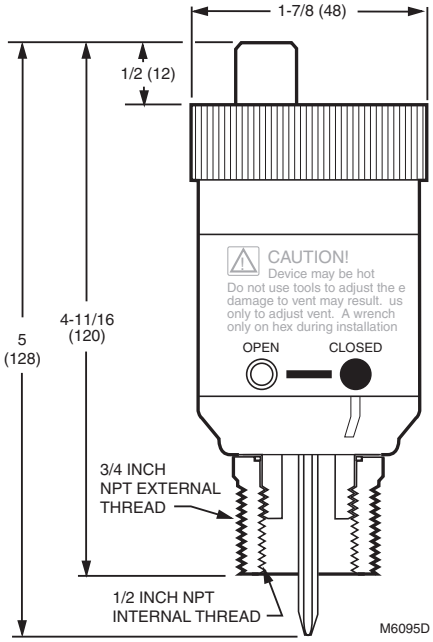

EA79 construction

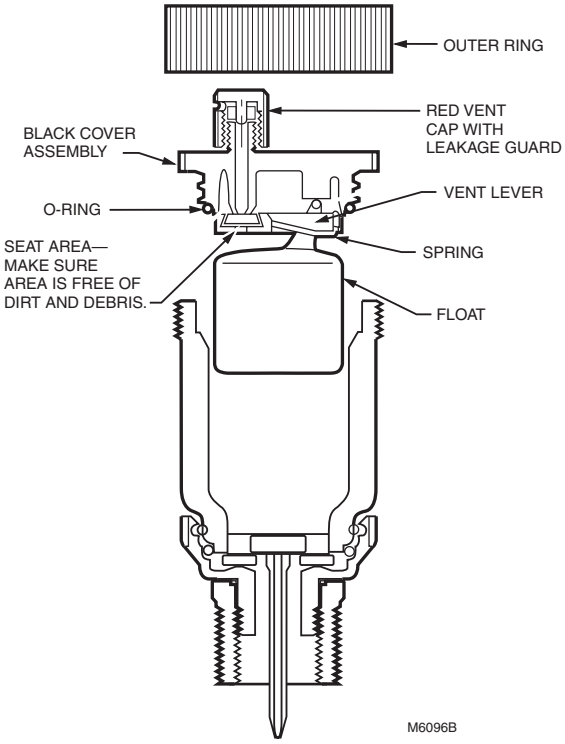

EA79 capabilities

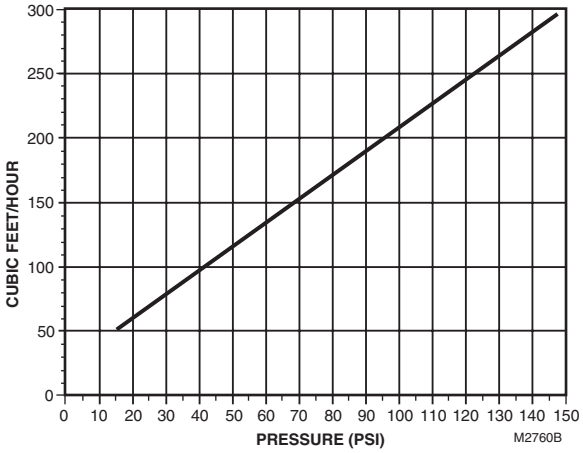

Application: Hydronics
Operating Temperature Range: 250°F Maximum (120°C Maximum)
Maximum Safe Operating Pressure (psi): 150 psi
Maximum Safe Operating Pressure (kPa): 1034 kPa
Approximate, Dimensions: 5 in. long x 1 7/8 in. diameter (128 mm long x 48 mm diameter)
Comments: Internal parts made of corrosion-resistant and chemical-resistant materials for use with hydronic systems that may contain concentrations of propylene or ethylene glycol.

Material Number	Connection Type	Connection Size (in.)	Description
EA79A1004	3/4 in. male NPT pipe thread with 1/2 in. female NPT pipe thread	3/4 in.	Industrial automatic air vent

EA122A Automatic Air Vent for Non-Heating System Applications

The EA122A Automatic Air Vent purges air from high pressure mains and equipment in hot or cold potable water systems.

- Includes removable float/valve assembly for easy servicing.
- Not for use in steam systems.
- Body, cover and float assembly made of thermoplastics.
- Internal parts made of corrosion-resistant and chemical-resistant materials for use with water systems containing light concentrations of propylene glycol, mineral oils, or petroleum-based oils.
- Oil resistant seal.
- EPDM seat disc and O-ring.

Dimensions in inches (millimeters)

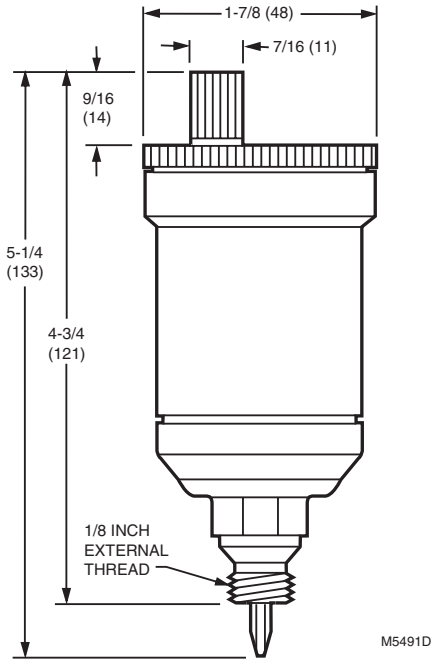

EA122A construction

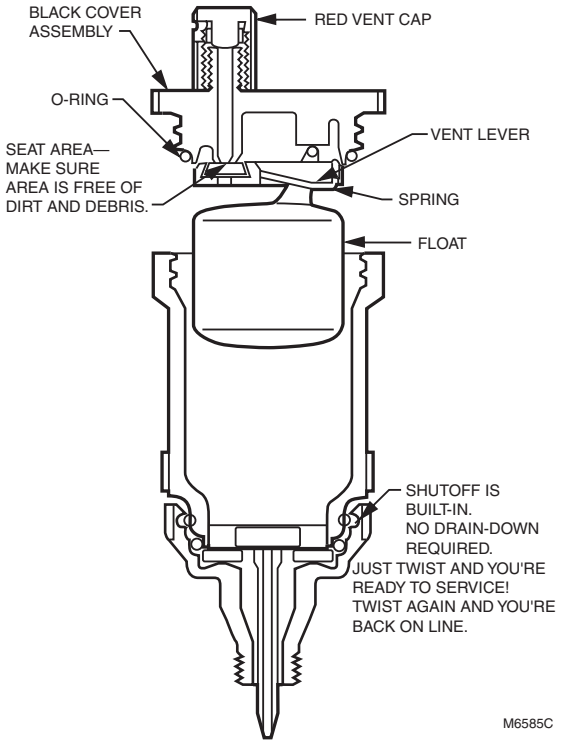

Application: Potable water installations
Operating Temperature Range: 212°F Maximum (100°C Maximum)
Maximum Safe Operating Pressure (psi): 90 psi
Maximum Safe Operating Pressure (kPa): 620 kPa
Approximate, Dimensions: 5 1/4 in. long x 1 7/8 in. diameter (133 mm long x 48 mm diameter)

Comments: Internal parts made of corrosion-resistant and chemical-resistant materials for use with hydronic systems that may contain concentrations of propylene or ethylene glycol.

Material Number	Connection Type	Connection Size (in.)	Description
EA122A1028	Male NPT	1/8 in.	Automatic air vent with built-in shut off valve; includes EPDM seat disc and O-ring.
EA122B117	Male NPT	1/8 in.	Automatic Air vent without build-in shutoff valve or leakage guard; includes EPDM seat disc and O-ring.

EA122A Automatic Air Vent for Heating System Applications

The EA122A Automatic Air Vent purges air from high pressure mains and equipment in hot or cold closed water systems.

- Includes removable float/valve assembly for easy servicing.
- Not for use in steam systems.
- Body, cover and float assembly made of thermoplastics.
- Internal parts made of corrosion-resistant and chemical-resistant materials for use with water systems containing light concentrations of propylene glycol, mineral oils, or petroleum-based oils.
- Oil resistant seal.
- NBR seat disc and O-ring.

Dimensions in inches (millimeters)

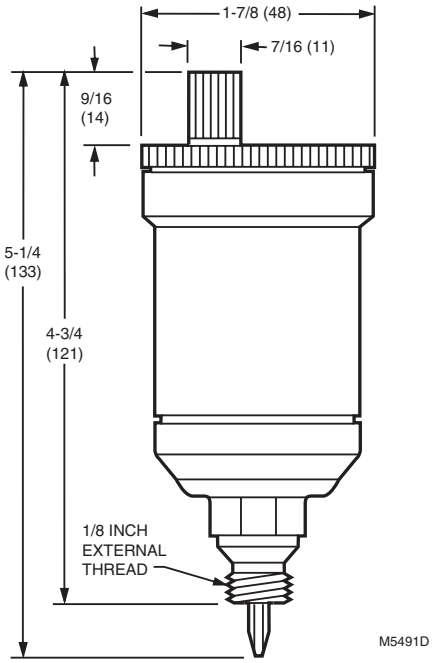

EA122A construction

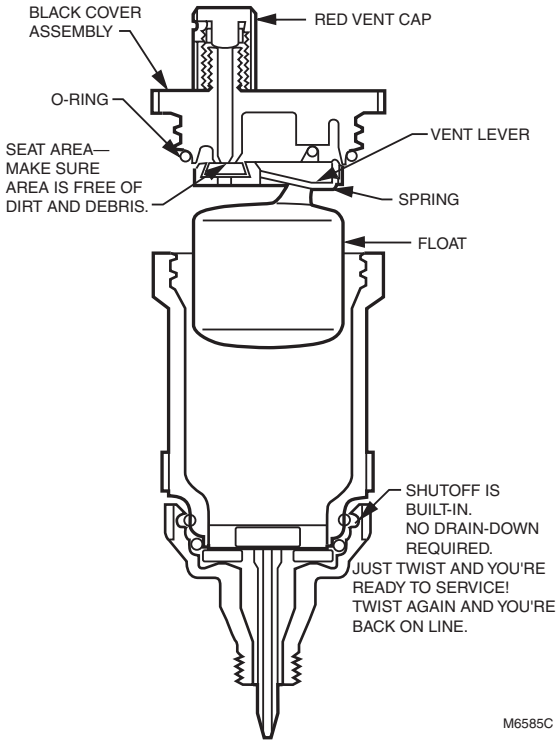

Application: Hydronic heating and cooling
Operating Temperature Range: 212°F Maximum (100°C Maximum)
Maximum Safe Operating Pressure (psi): 90 psi
Maximum Safe Operating Pressure (kPa): 620 kPa

Approximate, Dimensions: 5 1/4 in. long x 1 7/8 in. diameter (133 mm long x 48 mm diameter)
Comments: Internal parts made of corrosion-resistant and chemical-resistant materials for use with hydronic systems that may contain concentrations of propylene or ethylene glycol.

Material Number	Connection Type	Connection Size (in.)	Description
EA122A1002	Male NPT	1/8 in.	Automatic air vent with built-in shutoff valve and leakage guard, oil resistant

GoldTop—Universal Air Vent for Residential and Commercial Heating and Cooling Systems

The GoldTop offers a convenient, one-fits-all concept, to stock one vent for all your venting needs, between 1 and 150 psi systems. The revolutionary patented fulcrum design offers a venting rate of 3-4 times that of other products.

- Patent No. 5,988,201.

Application: Residential or commercial heating and cooling systems
Operating Temperature Range: 240°F Maximum (115°C Maximum)
Maximum Safe Operating Pressure (psi): 150 psi
Maximum Safe Operating Pressure (kPa): 1034 kPa
Approximate, Dimensions: 1 27/32 in. diameter x 3 1/4 in. long (24 mm diameter x 83 mm long)
Materials: Brass

Material Number	Connection Type	Connection Size (in.)	Weight	Description
FV180/U	Male NPT	1/8 in.	0.4 lb (0.18 kg)	1/8 in. NPT Goldtop Universal Air Vent for heating and cooling systems
FV180A/U	Male NPT	1/4 in.	0.4 lb (0.18 kg)	1/4 in. NPT Goldtop Universal Air Vent for heating and cooling systems
FV183/U	Male NPT	3/4 in.	0.4 lb (0.18 kg)	3/4 in. NPT Goldtop Universal Air Vent for heating and cooling systems

MaxiVent™ Air Vent for Heating and Cooling Systems

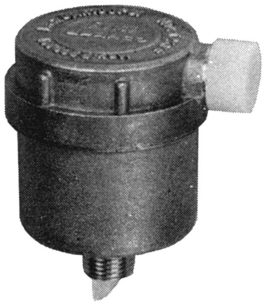

The Maxivent features a low profile, fit anywhere solid brass body and cover, and a high temperature polypropylene float.

Application: Residential or commercial heating and cooling systems
Operating Temperature Range: 240°F Maximum (115°C Maximum)
Maximum Safe Operating Pressure (psi): 150 psi
Maximum Safe Operating Pressure (kPa): 1034 kPa
Approximate, Dimensions: 2 in. high x 1 5/32 in. diameter (51 mm high x 29 mm diameter)
Materials: Brass

Material Number	Connection Type	Connection Size (in.)	Weight	Description
FV147/U	Male NPT	1/8 in.	0.12 lb (0.06 kg)	1/8 in. NPT Air Vent for heating and cooling systems
FV147A/U	Male NPT	1/4 in.	0.12 lb (0.06 kg)	1/4 in. NPT Air Vent for heating and cooling systems

AP400 Air Purger

Replacement Parts - Old Style AM Series (Aquamix)

- Heavy Duty cast iron construction
- 1 inch, 1 1/4 and 1 1/2 inch models (inlet and outlet)
- 1/2 inch bottom tapping for expansion tank mount
- 1/8 inch top tapping for air vent mount
- Directional flow arrow for correct installation

Application: Closed heating systems
Operating Temperature Range: 275°F Maximum (135°C Maximum)
Maximum Safe Operating Pressure (psi): 125 psi
Maximum Safe Operating Pressure (kPa): 862 kPa
Approximate, Dimensions: 6 in. long x 3-3/4 in. high x 2-3/8 in. wide (152 mm long x 95 mm high x 60 mm wide)
Materials: Cast Iron

Material Number	Connection Type	Pipe Size (inch)	Connection Size (in.)	Weight	Description
AP400/U	Female NPT	1 in.	Bottom: 1/2 in.; Top: 1/8 in.	4.2 lb (1.9 kg)	1 in. NPT Air Purger for closed heating systems
AP401/U	Female NPT	1 1/4 in.	Bottom: 1/2 in.; Top: 1/8 in.	3.8 lb (1.7 kg)	1 1/4 in. NPT Air Purger for closed heating systems
AP402/U	Female NPT	1 1/2 in.	Bottom: 1/2 in.; Top: 1/8 in.	8.6 lb (3.9 kg)	1 1/2 in. NPT Air Purger for closed heating systems

SuperVent® Air Eliminator – Eliminates Air from Hydronic Heating Systems without Bleeding

NPT
(PV-100)

Sweat
(PV-100S)

Press
(PV-100P)

The SuperVent, purges air through a no clog vent assembly, to control dirt and debris and minimize air vent fouling in Hydronic heating systems, while eliminating the need for bleeding.

- No clog vent.
- Dirt and Debris resistant.
- 360 degree adjustable collar ring for installation flexibility.
- Stainless steel concentrator which eliminates gurgling noise.
- Bronze body for rigid construction.
- Threaded connections.

Application: Residential or Commercial closed loop hydronic heating or chilled water systems
Operating Temperature Range: 240°F Maximum (115°C Maximum)
Maximum Safe Operating Pressure (psi): 125 psi
Maximum Safe Operating Pressure (kPa): 862 kPa
Materials: Bronze

How it works

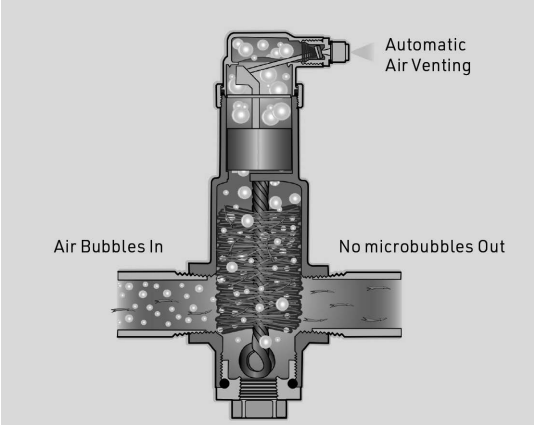

The PV Series SuperVent® eliminates air from hydronic heating systems without bleeding.

Material Number	Pipe Size (inches)	Dimensions H x L x W inches (mm)	Connection Type	Connection Size (in.)	Capacity (Cv)	Weight
PV075/U	3/4 in.	7.4 x 2.7 x 1.9 (188 x 68 x 48)	Female NPT	1/2 in.	13 Cv	2 lb (0.9 kg)
PV100/U	1 in.	8.1 x 3.2 x 2.1 (206 x 81 x 53)	Female NPT	1/2 in.	22 Cv	2.75 lb (1.2 kg)
PV125/U	1 1/4 in.	8.4 x 3.7 x 2.5 (213 x 94 x 63)	Female NPT	1/2 in.	38 Cv	3.5 lb (1.6 kg)
PV150/U	1 1/2 in.	9.7 x 4.3 x 3.1 (246 x 109 x 79)	Female NPT	1/2 in.	53 Cv	5 lb (2.3 kg)
PV100P/U	1 in.	8.1 x 6.4 x 2.1 (206 x 162.5 x 53)	Press	1/2 in.	22 Cv	3.26 lb (1.48 kg)
PV125P/U	1 1/4 in.	8.4 x 7.5 x 2.5 (213 x 191 x 64)	Press	1/2 in.	38 Cv	4.4 lb (2.0 kg)
PV075S/U	3/4 in.	7.4 x 3.2 x 1.9 (188 x 81 x 48)	Sweat	1/2 in.	13 Cv	2 lb (0.9 kg)
PV100S/U	1 in.	8.1 x 3.7 x 2.1 (206 x 94 x 53)	Sweat	1/2 in.	22 Cv	2.75 lb (1.2 kg)
PV125S/U	1 1/4 in.	8.4 x 4.4 x 2.5 (213 x 112 x 63)	Sweat	1/2 in.	38 Cv	3.5 lb (1.6 kg)
PV150S/U	1 1/2 in.	9.7 x 5.4 x 3.1 (246 x 137 x 79)	Sweat	1/2 in.	53 Cv	5 lb (2.3 kg)

SuperVent Replacement Parts

Material Number	Description
PV-001RP/U	Replacement Air Vent Assembly for PowerVent (pre 2004) size 3/4 in., 1 in., 1 1/4 in., 1 1/2 in. and 2 in.
PV-020RP/U	PV SuperVent Vent Top Replacement (New Style 90 Degree)

SuperVent® Vent Top for Heating and Cooling Systems

The SuperVent has high venting capacity and incorporates a check valve. Use with SuperVent PV Series products.

Application: Residential or commercial heating and cooling systems
Operating Temperature Range: 240°F Maximum (115°C Maximum)
Maximum Safe Operating Pressure (psi): 150 psi
Maximum Safe Operating Pressure (kPa): 1034 kPa
Materials: Brass

Material Number	Connection Type	Pipe Size (inch)	Pipe Size (DN)	Connection Size (in.)	Weight	Approximate, Diamensions
SV173/U	NPT	3/8 in.	DN10	3/8 in.	0.43 lb (0.19 kg)	3 in. high x 2 in. diameter; Maximum diameter: 2 in. (76 mm high x 51 mm diameter; Maximum diameter: 51 mm)
SV175/U	NPT	1/2 in.		1/2 in.	0.43 lb (0.19 kg)	3 in. high x 2 in. diameter; Maximum diameter: 2 in. (76 mm high x 51 mm diameter; Maximum diameter: 51 mm)

SuperVent® Air Eliminator Universal Models – Eliminate Air from Hydronic Heating Systems without Bleeding

The SuperVent, purges air through a no clog vent assembly, to control dirt and debris and minimize air vent fouling in Hydronic heating systems, while eliminating the need for bleeding.

- No clog vent.
- Dirt and Debris resistant.
- 360 degree adjustable collar ring for installation flexibility.
- Stainless steel concentrator which eliminates gurgling noise.
- Bronze body for rigid construction.
- Threaded connections.

Application: Residential or Commercial closed loop hydronic heating or chilled water systems
Connection Type: Female NPT
Operating Temperature Range: 240°F Maximum (115°C Maximum)

Maximum Safe Operating Pressure (psi): 125 psi
Maximum Safe Operating Pressure (kPa): 862 kPa
Materials: Bronze

Typical Installation

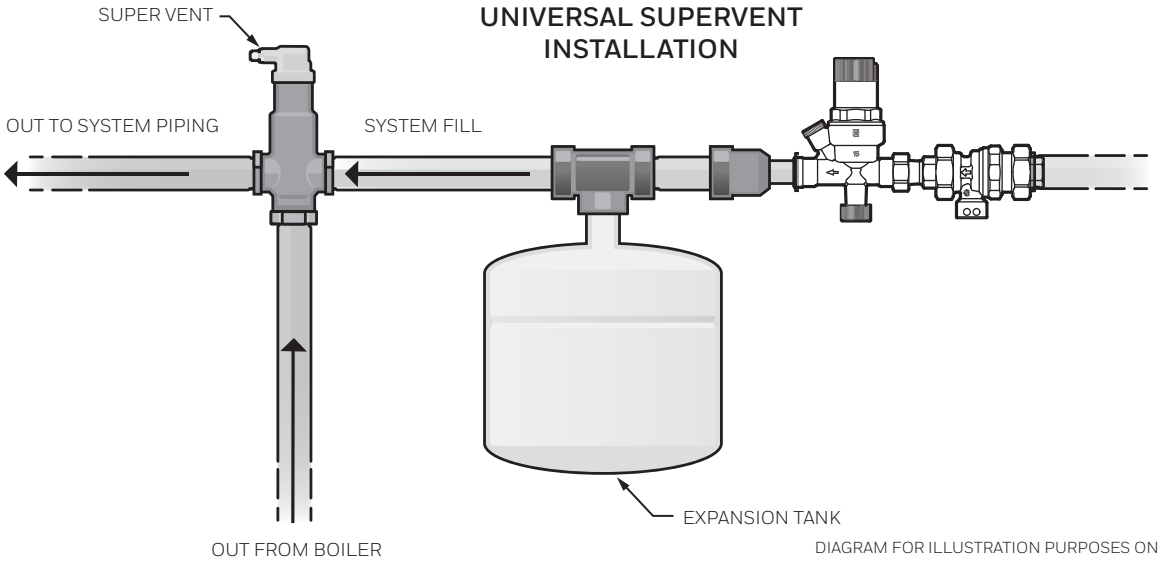

DIAGRAM FOR ILLUSTRATION PURPOSES ONLY.

Material Number	Pipe Size (inch)	Connection Size (in.)	Capacity (Cv)	Dimensions H x L x W inches (mm)	Weight
PVU100/U	1 in.	1 in. bottom inlet	12 Cv	8.4 x 3.2 x 2.1 (213 x 81 x 53)	2.8 lb (1.3 kg)
PVU125/U	1 1/4 in.	1 1/4 in. bottom inlet	27 Cv	8.9 x 3.7 x 2.5 (226 x 94 x 63)	3.6 lb (1.6 kg)
PVU150/U	1 1/2 in.	1 1/2 in. bottom inlet	36 Cv	10 x 4.3 x 3.1 (254 x 109 x 79)	5.2 lb (2.4 kg)

Magnetic Hydraulic Separators

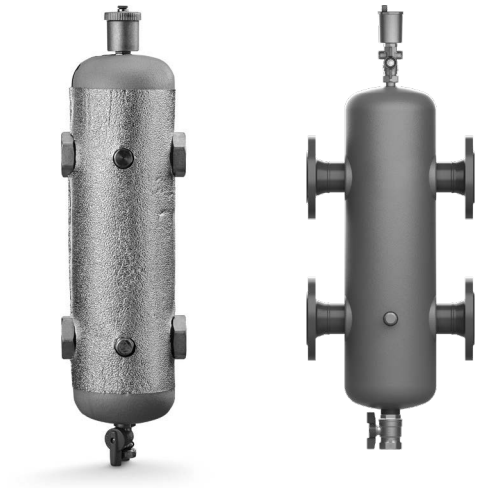

Insulation Included

APPLICATION

In modern hydronic installations, the HYDROSEP-1 magnetic hydraulic separator performs the following functions:

- Hydraulic separator: Makes connected hydraulic circuits independent, preventing any flow influence between circulators installed in series and balancing the difference of flows through the circuits, all according to the characteristics of their corresponding circulator.
- Dirt separator: Separates and eliminates any debris inside the circuits thanks to the combined action of a magnet and a metallic mesh surface which allow for the separation to take place. The impurities can subsequently be removed by the discharge valve.
- Deaerator: Separates and eliminates the air inside the circuits through the air vent placed on the separator's upper connection. The hydraulic separators are equipped with insulation to minimize thermal loss.

OPERATING SPECIFICATIONS (UNION VERSION)

Temperature Range: 32-230 °F (0-110 °C)
Max. Working Pressure: 145 psi. (10 bar)
Max. Pressure of Air Vent Operation: 102 psi. (7 bar)
Fluids Used: Water, glycol-based solution (max. 50% glycol concentration)
Separator Connections: See Table 2.
Air Vent Valve Connection: 1/2 in. ISO228
Drain Tap Connections: 3/4 GHT and threaded cap
Additional Frontal Connections: 1/2 in. ISO228

Table 1. Dimensions for Union Versions (in Inches).

Model Number	Size	A	B	C	D	E	F	G	H
HYDROSEP-102-U/U	1 in.	21.5	5.6	8.7	7.3	5.8	4.6	3	4
HYDROSEP-103-U/U	1-1/4 in.	23.3	6	9.4	7.8	6.5	5.1	3.5	4.5
HYDROSEP-104-U/U	1-1/2 in.	25.3	6.6	10.2	8.4	7.7	6.1	4.5	5.5
HYDROSEP-105-U/U	2 in.	27	7.1	11	8.9	8.7	7.1	5.5	6.5

Table 2. Required Adapters (Union Versions).

Model Number*	Description
HS-NPT-102/U	1 in. Union NPT Threaded Adapter, 2 NPT Fittings
HS-NPT-103/U	1-1/4 in. Union NPT Threaded Adapter, 2 NPT Fittings
HS-NPT-104/U	1-1/2 in. Union NPT Threaded Adapter, 2 NPT Fittings
HS-NPT-105/U	2 in. Union NPT Threaded Adapter, 2 NPT Fittings
HS-PRESS-102/U	1 in. Union Press Adapter, 2 Press Fittings
HS-PRESS-103/U	1-1/4 in. Union Press Adapter, 2 Press Fittings
HS-PRESS-104/U	1-1/2 in. Union Press Adapter, 2 Press Fittings
HS-PRESS-105/U	2 in. Union Press Adapter, 2 Press Fittings
HS-SWEAT-102/U	1 in. Union Sweat Adapter, 2 Sweat Fittings
HS-SWEAT-103/U	1-1/4 in. Union Sweat Adapter, 2 Sweat Fittings
HS-SWEAT-104/U	1-1/2 in. Union Sweat Adapter, 2 Sweat Fittings
HS-SWEAT-105/U	2 in. Union Sweat Adapter, 2 Sweat Fittings

* Each vessel requires 4 union fittings.

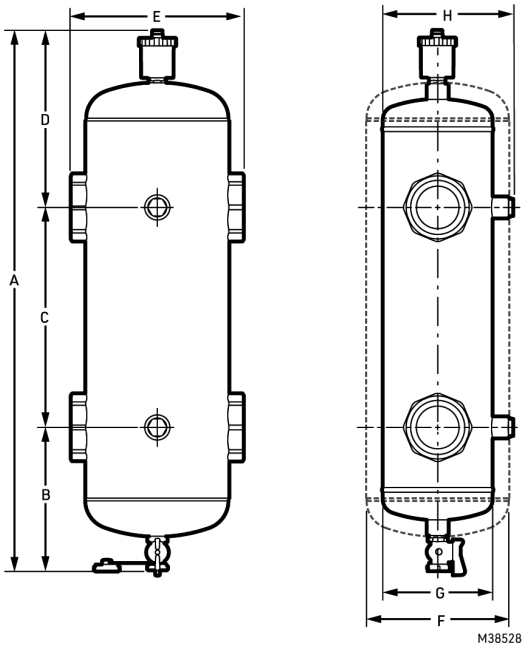

Note: Product/accessories/parts are to be used for closed heating systems only.

MATERIALS

Union Version

Separator Body: FE360 varnished steel

Automatic Air Vent Valve:
Body and Cap: ASTM B124 UNS C37700 (CW617N EN 12165) brass
O-Ring: EPDM
Shutter Spring: Inox
Internal Float: PP-H

Connection Fitting Adapters:
Body: ASTM B124 UNS C37700 (CW617N EN 12165) brass
Gaskets: PTFE

Plug:
Body: ASTM UNS C38500 (CW614N EN 12164) brass
Gasket: EPDM

Drain Tap: ASTM B124 UNS C37700 (CW617N EN 12165) brass

Insulation:
Shell: open cell PE foam with embossed aluminum lining
Thickness: 0.78 in. (20 mm)
Density: 0.001 lb/in^3 (30 kg/m^3)
Thermal Conductivity: 0.038 W/m K
Fire reaction (DIN 4102): Class B2

Magnet: AlNiCo (AlNiCo magnet provides higher operating temperature and does not corrode.)

Flanged Version

Separator Body: FE360 varnished steel

Automatic Air Vent Valve:
Body and Cap: ASTM B124 UNS C37700 (CW617N EN 12165) brass
O-Ring: EPDM
Shutter Spring: Inox
Internal Float: TPX

Drain Ball Valve: ASTM B124 UNS C37700 (CW617N EN 12165) brass

Insulation:
Shell: Polypropylene
Thickness: 0.78 in. (20 mm)
Density: 0.001 lb/in^3 (30 kg/m^3)
Thermal Conductivity: 0.039 W/m K
Fire Reaction (DIN 4102): Class B2

Magnet: AlNiCo (AlNiCo magnet provides higher operating temperature and does not corrode.)

Table 3. Dimensions for Flanged Hydraulic Separator (in Inches).

Model Number	Size	A	B	C	D	E	F
HYDROSEP-105-F/U	2 in.	36.5	12	11	13.5	13	7.1
HYDROSEP-106-F/U	2-1/2 in.	41.2	12.8	14.2	14.2	14.1	8.3
HYDROSEP-107-F/U	3 in.	47.5	14.4	17.3	15.8	17.7	10.2
HYDROSEP-108-F/U	4 in.	52	15.4	19.7	17	19.7	12.4
HYDROSEP-109-F/U	5 in.	58.3	15.7	23.6	19	21.7	14.4
HYDROSEP-110-F/U	6 in.	66.1	17.7	27.6	20.9	23.6	15.6

Table 4. Replacement Parts.

Model Number	Description
HS-VENTFLANGED/U	Replacement vent for flanged hydraulic separator.
HS-VENTUNION/U	Replacement vent for union hydraulic separator.

Table 5.

Model Number	Version	Connections	Max. Flow Rate GPM (m^3/h)	Weight lbs (kg)	Volume gal (l)
HYDROSEP-102-U/U	Union	1 in.	11 (2.5)	5.95 (2.7)	0.39 (1.5)
HYDROSEP-103-U/U		1-1/4 in.	17.6 (4)	8.15 (3.7)	0.66 (2.5)
HYDROSEP-104-U/U		1-1/2 in.	26.41(6)	12.56 (5.7)	1.18 (4.5)
HYDROSEP-105-U/U		2 in.	39.62 (9)	15.87 (7.2)	1.9 (7.2)
HYDROSEP-105-F/U	Flanged	2 in.	46.23 (10.5)	41.88 (19)	2.64 (10)
HYDROSEP-106-F/U		2-1/2 in.	77 (17.5)	55.11 (25)	4.49 (17)
HYDROSEP-107-F/U		3 in.	110 (25)	79.36 (36)	9.51 (36)
HYDROSEP-108-F/U		4 in.	184.92 (42)	105.8 (48)	17.43 (66)
HYDROSEP-109-F/U		5 in.	286.18 (65)	160.9 (73)	27.73 (105)
HYDROSEP-110-F/U		6 in.	418.27 (95)	213.84 (97)	28.79 (109)

OPERATING SPECIFICATIONS (FLANGED VERSION)

Temperature Range: 32-266 °F (0-130 °C)

Max. Working Pressure: 145 psi. (10 bar)

Max. Pressure of Air Vent Operation: 72 psi. (5 bar)

Fluids Used: Water, glycol-based solution (max. 50% glycol concentration)

Separator Connections: ASME 150 lb flange

Air Vent Valve Connection: 1/2 in. ISO228

Discharge Valve Connection: 1 in.

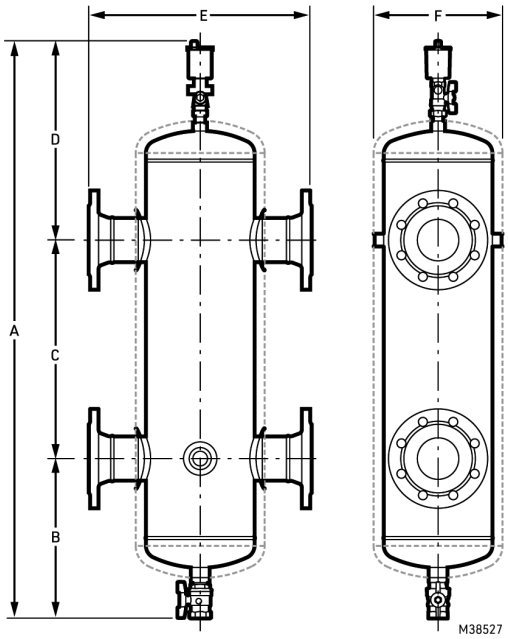

NK300S-100

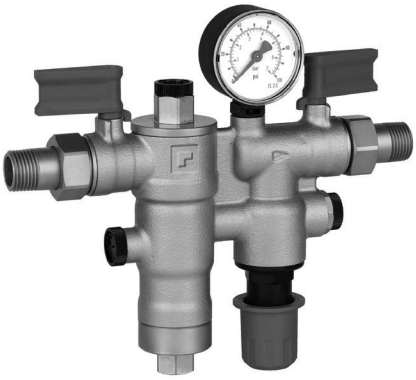

The NK300S Boiler Feed Combination serves as a boiler fill valve used in closed loop heating systems. The NK300S is a (re filling combination valve that contains an integrated pressure reducing valve, strainer, double check backflow preventer with air vent (to protect potable water supply against back flow of heating water into supply pipe), two shut-off ball valves, pressure gauge, and conveniently located test ports for easy inspections and check out.

- Low maintenance effort - cartridge insert and valve insert are completely replaceable allowing inline serviceability. Permanent connection with the drinking water supply by hose line or piping is possible
- Optimal protection of the drinking water supply system with use of DCuV.
- Pressure reducing valve with inlet pressure balancing -inlet pressure fluctuation does not influence the outlet pressure.
- Outlet pressure adjustable and directly visible on the pressure gauge.

Model: NK300S BOILER FEED COMBINATION
Model Numbers: NK300S-100 (includes sweat, threaded, and Viega Press Connections)
Medium: Water
Regulator Mechanism: Fiber-reinforced EPDM diaphragm
Filter Mechanism: Stainless steel fine filter mesh
Inlet Pressure (Maximum): 150 psi (10.3 bar)
Inlet Pressure (Min): 30 psi (2.0 bar)
Outlet Pressure Range: 10 psi - 58 psi (0.7 bar - 4.0bar)
Outlet Pressure: Factory set at 15 psi (1 bar)
Pressure setting tolerance: ± 4 psi.
Differential: 14.5 psi minimum (inlet to outlet)
Fluid Temperature (Maximum): 180°F (82°C) according ASSE 1081
Ambient Temperature Range: 33°F to 140°F (1°C to 60°C).
Pressure Gauge: 0-60 psi @ max temp 140°F (60°C)
Connection size: 1/2" NPT or sweat
Connection size discharge: 1/2" NPT
Connection size test ports: 1/4" NPT
Installation position: horizontal pipework with discharge connection directed downwards
Max. flow rate: 16 gpm (60 l/min) @ 22 psi (1.5 bar)
Approvals: ASSE 1081 Listed
Body: Dezincification resistant brass housing
Internal Parts: 1/2" NPT Discharge connection, valve cartridge, valve insert and spring bonnet in high-grade synthetic material
Seals: NBR and EPDM
Steel Adjustment Spring: Steel

*Boiler Trim Kits available with NK. See Boiler Trim Kit section.

Material Number	Description	Maximum Safe Operating Pressure (psi)	Maximum Safe Operating Pressure (kPa)	Connection Type
NK300S-100	NK300S Boiler Feed Combination including sweat and threaded connections	150 psi	1034 kPa	Includes Sweat and threaded connections
NK300S-100UP	NK300S Boiler Feed Combination including union press fitting connections	150 psi	1034 kPa	Includes Union press fittings connections

NK300 Replacement Parts

Material Number	Description
0901443	X10 SEAL RING SET PRV/FILTER/SG/NK 1/2
0903733	CARTRIDGE INSERT COMPL. BA/NK 1/2-1
0904181	PRESSURE GAUGE 1/4" NPT 0-87PSI (0-6BAR)
0904182	CHECK VALVE INSERT NK300S-100
D04FMA-1/2	PRV CARTRIDGE D04FM F NK300S+SE
S06K-1/4NPT	(BP5) PLASTIC PLUG NPT

"DialSet" Boiler Fill Valves

FM911

Pressure regulating valve for automatic control of boiler feed water and other pressure reducing applications. Especially constructed for expansion tank mounting.

- DialSet Fill Valve.
- Built in check valve.

Valve Type: DialSet Fill Valve
Pipe Size (inch): 1/2 in. Inlet Size – 1/2 in.
Connection Type: NPT; Inlet – Sweat or Threaded
Ambient Temperature Range: 212°F Maximum (100°C Maximum)
Pressure Range (psi): 8 psi to 50 psi
Materials (Body): Brass

Material Number	Application	Maximum Safe Operating Pressure (psi)	Maximum Safe Operating Pressure (kPa)	Weight	Description
FM911/U	DialSet boiler fill valve pressure reducing valve 15 psi preset and backflow preventer (VF06-100-SUSUT and BP900 assembly)	150 psi	1034 kPa	4 lb (1.8 kg)	1/2 in. NPT Backflow preventer and DialSet boiler fill assembly, includes union nut and both sweat and NPT tailpiece
VF06-100-SUSUT/U	DialSet Fill Valve pressure regulating boiler feed valve with check valve.	150 psi	1034 kPa	1.8 lb (0.8 kg)	1/2 in. sweat union pressure reducing valve, DialSet boiler fill valve, includes union nut and both sweat and NPT tailpiece

Backflow Preventers with Intermediate Atmospheric Vent for Heating Systems

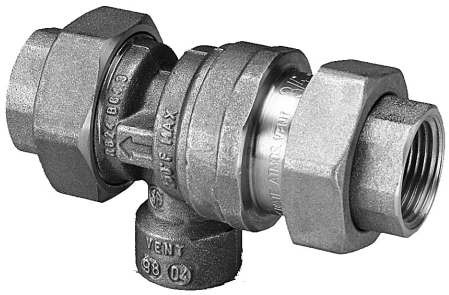

The BP900 backflow preventer is designed for continuous pressure applications on small supply lines. It uses an intermediate vacuum breaker to protect against backflow and back siphonage of contaminated water into portable water supplies.

- Ideal for boiler feed lines, livestock drinking fountains, trailer park water hook-ups, laboratory equipment and numerous other applications
- Suitable for hot or cold water service
- Designed for non-continuous backflow temperatures up to 250°F and working supply pressures up to 175 psi

Application: Backflow Preventer
Connection Type: NPT
Ambient Temperature Range: 250°F Maximum (121°C Maximum)
Maximum Safe Operating Pressure (psi): 175 psi
Maximum Safe Operating Pressure (kPa): 1207 kPa
Approximate, Dimensions: 4 7/8 in. long x 2 1/2 in. wide (124 mm long x 63 mm wide)
Approvals, CSA: Certified
Approvals, Others: ASSE Certified

Typical Installation

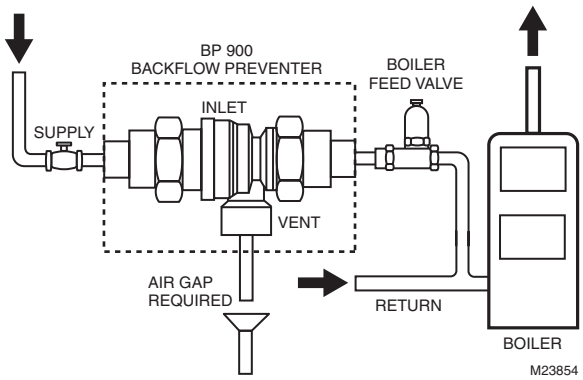

Material Number	Pipe Size (inch)	Pipe Size (DN)	Connection Size (in.)	Description	Weight
BP900/U	1/2 in.	DN15	1/2 in.	Double check intermediate vacuum breaker - 1/2 in. NPT	1.2 lb (0.54 kg)

Sweat and Threaded Thermometers with Thermowells

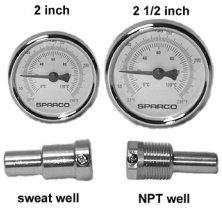

Thermometer with Sweat or Threaded Connection.

- Brass thermowell is included to allow the thermometer to be removed without draining the system.
- 2 inch or 2 1/2 inch Dial.

Application: Brass thermowell is included to allow the thermometer to be removed without draining the system.
Temperature Range: 32°F to 250°F (0°C to 121°C)

Materials: Case: steel; Well: brass
Comments: Brass thermowell is included to allow the thermometer to be removed without draining the system.

Material Number	Connections	Approximate, Dimensions	Weight
GS200/U	1/2 in. Sweat	Dial Size – 2 in.; Stem length – 1 1/4 in. (Dial Size – 51 mm; Stem length – 51 mm)	0.21 lb (0.095 kg)
GS250/U	1/2 in. Sweat	Dial Size – 2 1/2 in.; Stem length – 1 1/4 in. (Dial Size – 63.5 mm; Stem length – 51 mm)	0.25 lb (0.114 kg)
GT161/U	1/2 in. NPT	Dial Size – 2 in.; Stem length – 1 1/2 in. (Dial Size – 51 mm; Stem length – 51 mm)	0.21 lb (0.095 kg)
GT162/U	1/2 in. NPT	Dial Size – 2 1/2 in.; Stem length – 1 1/2 in. (Dial Size – 63.5 mm; Stem length – 51 mm)	0.25 lb (0.114 kg)

Tridicators

Pressure/temperature gauge with relief set point indicator for boilers and shut off valve.

Dimensions Diagram

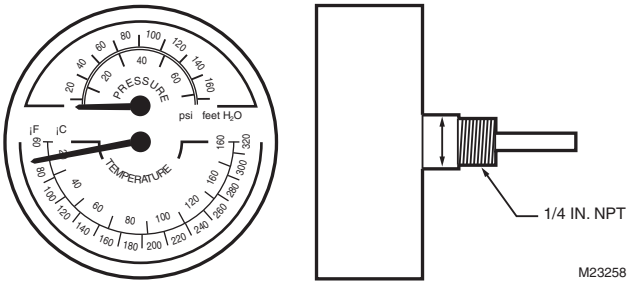

Application: Pressure/temperature gauge with relief set point indicator
Maximum Safe Operating Pressure (psi): 75 psi
Temperature Range: 60°F to 320°F (15°C to 160°C)

Material Number	Connections	Approximate, Dimensions	Weight	Comments
TD-090/U	1/4 in. NPT	Dial Size – 3 1/8 in.; Stem length – 1 21/32 in. (Dial Size – 79.4 mm; Stem length – 23 mm)	0.3 lb (0.14 kg)	Pressure/temperature gauge with relief set point indicator
TD-165/U	1/4 in. NPT	Dial Size – 3 1/8 in.; Stem length – 2 in. (Dial Size – 79.4 mm; Stem length – 42.1 mm)	0.3 lb (0.14 kg)	Pressure/temperature gauge with relief set point indicator
TDV-040/U	1/2 in. NPT	Dial Size – 3 1/8 in.; Stem length – 29/32 in. (Dial Size – 79.4 mm; Stem length – 23.02 mm)	0.4 lb (0.18 kg)	Pressure/temperature gauge with relief set point indicator and shut off valve

Boiler Trim Kit with SuperVent

TK Series Combo Boiler Trim kits are a quick way to purchase boiler trim when doing a boiler change out. All kits with SuperVent include expansion tank and a high performance air eliminator.

Maximum Safe Operating Pressure (psi): 100 psi
Maximum Safe Operating Pressure (kPa): 689 kPA
Operating Temperature Range: 240°F Maximum (115°C Maximum)
Diameter: 11 in. (279 mm)

Material Number	Connection Size (in.)	Connection Type	Height	Volume	Weight	Maximum Acceptance Volume	Includes
TK30PV100FM/U	SuperVent: 1 in.; Tank: 1/2 in.	Tank: Male NPT; SuperVent: Female NPT	15 1/2 in. (394 mm)	4.4 gal. (16.7 L)	16 lb (7.3 kg)	2.5 gal. (9.5 L)	TK300-30, PV100, SCV-050, FM911
TK30PV100SFM/U	SuperVent: 1 in.; Tank: 1/2 in.	Tank: Male NPT; SuperVent: Sweat	15 1/2 in. (394 mm)	4.4 gal. (16.7 L)	16 lb (7.3 kg)	2.5 gal. (9.5 L)	TK300-30, PV100S, SCV-050, FM911
TK30PV100NK/U	SuperVent: 1 in.; Tank: 1/2 in.	Tank: Male NPT; SuperVent: Female NPT	15 1/2 in. (394 mm)	4.4 gal. (16.7 L)	16 lb (7.3 kg)	2.5 gal. (9.5 L)	TK300-30, PV100, SCV-050, NK300S-100
TK30PV100SNK/U	SuperVent: 1 in.; Tank: 1/2 in.	Tank: Male NPT; SuperVent: Sweat	15 1/2 in. (394 mm)	4.4 gal. (16.7 L)	16 lb (7.3 kg)	2.5 gal. (9.5 L)	TK300-30, PV100S, SCV-050, NK300S-100
TK30PV100PNKP/U	SuperVent: 1 in.; Tank: 1/2 in.	Tank: Male NPT; SuperVent: Press	15 1/2 in. (394 mm)	4.4 gal. (16.7 L)	16 lb (7.3 kg)	2.5 gal. (9.5 L)	TK300-30, PV100P, SCV-050, NK300S-100UP
TK30PV125FM/U	SuperVent: 1 1/4 in.; Tank: 1/2 in.	Tank: Male NPT; SuperVent: Female NPT	15 1/2 in. (394 mm)	4.4 gal. (16.7 L)	16.8 lb (7.6 kg)	2.5 gal. (9.5 L)	TK300-30, PV125, SCV-050, FM911
TK30PV125SFM/U	SuperVent: 1 1/4 in.; Tank: 1/2 in.	Tank: Male NPT; SuperVent: Sweat	15 1/2 in. (394 mm)	4.4 gal. (16.7 L)	16.8 lb (7.6 kg)	2.5 gal. (9.5 L)	TK300-30, PV125S, SCV-050, FM911
TK30PV125NK/U	SuperVent: 1 1/4 in.; Tank: 1/2 in.	Tank: Male NPT; SuperVent: Male NPT	15 1/2 in. (394 mm)	4.4 gal. (16.7 L)	16 lb (7.3 kg)	2.5 gal. (9.5 L)	TK300-30, PV125, SCV-050, NK300S-100
TK30PV125SNK/U	SuperVent: 1 1/4 in.; Tank: 1/2 in.	Tank: Male NPT; SuperVent: Sweat	15 1/2 in. (394 mm)	4.4 gal. (16.7 L)	16 lb (7.3 kg)	2.5 gal. (9.5 L)	TK300-30, PV125S, SCV-050, NK300S-100
TK30PV125PNKP/U	SuperVent: 1 1/4 in.; Tank: 1/2 in.	Tank: Male NPT; SuperVent: Press	15 1/2 in. (394 mm)	4.4 gal. (16.7 L)	16 lb (7.3 kg)	2.5 gal. (9.5 L)	TK300-30, PV125P, SCV-050, NK300S-100UP
TK60PV125FMNC/U	SuperVent: 1 1/4 in.; Tank: 1/2 in.	Tank: Male NPT; SuperVent: Female NPT	23 in. (584 mm)	7.6 gal. (28.8 L)	17.5 lb (7.95 kg)	2.5 gal. (9.5 L)	TK300-60, PV125, FM911
TK60PV125SFMNC/U	Sweat: 1 1/4 in.; Tank: 1/2 in.	Tank: Male NPT; SuperVent: Female NPT	23 in. (584 mm)	7.6 gal. (28.8 L)	17.5 lb (7.95 kg)	2.5 gal. (9.5 L)	TK300-60, PV125S, FM911
TK60PV150SNK/U	SuperVent: 1 1/2 in.; Tank: 1/2 in.	Tank: Male NPT; SuperVent: Sweat	23 in. (584 mm)	7.6 gal. (28.8 L)	22 lb (9.98 kg)	2.5 gal. (9.5 L)	TK300-60, PV150S, NK300S-100
TK60PV150NK/U	SuperVent: 1 1/2 in.; Tank: 1/2 in.	Tank: Male NPT; SuperVent: Female NPT	23 in. (584 mm)	7.6 gal. (28.8 L)	22 lb (9.98 kg)	2.5 gal. (9.5 L)	TK300-60, PV150, NK300S-100
TK60PV150PNKP/U	SuperVent: 1 1/2 in.; Tank: 1/2 in.	Tank: Male NPT; SuperVent: Press	23 in. (584 mm)	7.6 gal. (28.8 L)	23 lb (10.43 kg)	2.5 gal. (9.5 L)	TK300-60, PV150P, NK300S-100UP
TK60PV200NK/U	SuperVent: 2 in.; Tank: 1/2 in.	Tank: Male NPT; SuperVent: Female NPT	23 in. (584 mm)	7.6 gal. (28.8 L)	25 lb (11.34 kg)	2.5 gal. (9.5 L)	TK300-60, PV200, NK300S-100

Boiler Trim Kit with Air Purger

TK Series Boiler Trim kits are convenient when doing a boiler change out. They include expansion tank, air purger and air vent; selected models include FM911 combination boiler fill valve/ backflow preventer and/or service check valves.

Maximum Safe Operating Pressure (psi): 100 psi
Maximum Safe Operating Pressure (kPa): 689 kPA
Operating Temperature Range: 240°F Maximum (115°C Maximum)
Diameter: 11 in. (279 mm)

Material Number	Connection Size (in.)	Connection Type	Height	Volume	Weight	Maximum Acceptance Volume	Includes
TK300-30A-1FM/U	Tank: 1/2 in. Air Purger: 1 in.	Tank: Male NPT; Air Purger: Female NPT	15 1/2 in. (394 mm)	4.4 gal. (16.7 L)	16.6 lb (7.5 kg)	2.5 gal. (9.5 L)	TK300-30, AP400, FV180, SCV-0125, SCV-050, FM911
TK300-30A-2FM/U	Tank: 1/2 in. Air Purger: 1 1/4 in.	Tank: Male NPT; Air Purger: Female NPT	15 1/2 in. (394 mm)	4.4 gal. (16.7 L)	16.6 lb (7.5 kg)	2.5 gal. (9.5 L)	TK300-30, AP401, FV180, SCV-0125, SCV-050, FM911

TK300 Series Expansion Tanks—Heating

Expansion Tanks absorb hot water expansion in closed heating systems. They are equipped with butyl diaphragms to separate the air from the system water. Pre-pressurized, the tank keeps fluids circulating and maintains minimum pressure.

- Butyl/EPDM diaphragm - 9 times better than natural rubber
- Deep-drawn steel tank
- Controls system pressure
- Air-tight cushion-factory pre-charged to 12 psig and 100% tested
- 7 year warranty for units with date code 1901 or newer.

Maximum Safe Operating Pressure (psi): 100 psi
Maximum Safe Operating Pressure (kPa): 689 kPA

Operating Temperature Range: 240°F Maximum (115°C Maximum)
Comments: Heating

Material Number	Connection Size (in.)	Connection Type	Diameter	Height	Volume	Weight	Maximum Acceptance Volume	Materials
TK300-15/U	1/2 in.	Male NPT	8 in. (203.2 mm)	13 in. (330.2 mm)	2.0 gal (7.6 L)	5 lb (2.3 kg)	1 gal (3.8 L)	Steel shell; Heavy duty Butyl diaphragm
TK300-30/U	1/2 in.	Male NPT	11 in. (279.4 mm)	15 in. (381.0 mm)	4.4 gal (16.7 L)	9 lb (4.1 kg)	2.5 gal (9.5 L)	Steel shell; Heavy duty Butyl diaphragm
TK300-60/U	1/2 in.	Male NPT	11 in. (279.4 mm)	20 in. (508.0 mm)	6.7 gal (25.4 L)	14 lb (6.4 kg)	2.7 gal (10.2 L)	Steel shell; Heavy duty Butyl diaphragm
TK300-90/U	1/2 in.	Male NPT	15 in. (381.0 mm)	21 in. (533.4 mm)	14.0 gal (53.0 L)	23 lb (10.4 kg)	11.3 gal (42.8 L)	Steel shell; Heavy duty Butyl diaphragm

Expansion Tank Sizing based on BTUs

Boiler	Type of Radiation			
Net Output in 1000's of BTU/Hr	Finned Tube Baseboard or Radiant Panel	Convectors or Unit Heaters	Radiators Cast Iron	Baseboard Cast Iron
MBH	Use Model	Use Model	Use Model	Use Model
25	TK300-15	TK300-15	TK300-15	TK300-15
50	TK300-15	TK300-15	TK300-30	TK300-30
75	TK300-30	TK300-30	TK300-30	TK300-60
100	TK300-30	TK300-30	TK300-60	TK300-60
125	TK300-30	TK300-60	TK300-60	TK300-90
150	TK300-30	TK300-60	TK300-90	TK300-90
175	TK300-60	TK300-60	XPS-030V	XPS-030V
200	TK300-60	TK300-60	XPS-030V	XPS-030V
250	TK300-60	TK300-90	XPS-030V	XPS-040V
300	TK300-90	XPS-030V	XPS-030V	XPS-040V
350	XPS-030V	XPS-030V	XPS-040V	XPS-060V
400	XPS-030V	XPS-040V	XPS-040V	XPS-060V

Service Check Valves

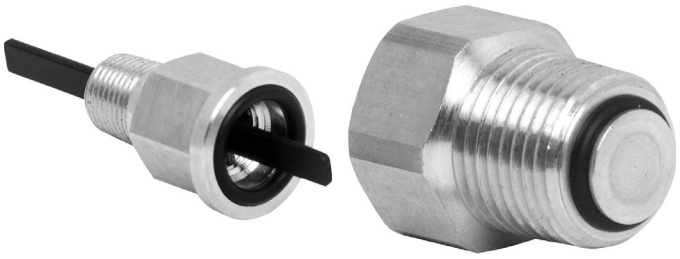

Service Check Valves for air vents and expansion tanks allow easy field service without draining system.

CAUTION: Reduce system temperature to ambient and pressure to 0 psi before servicing component. Failure to do so may result in injuries.

Maximum Safe Operating Pressure (psi): 100 psi
Maximum Safe Operating Pressure (kPa): 689 kPA
Operating Temperature Range: 240°F Maximum (115°C Maximum)

Material Number	Connection Size (in.)	Connection Type
SCV-0125/U	1/8 in.	Inlet FNPT, Outlet MNPT
SCV-050/U	1/2 in.	Inlet FNPT, Outlet MNPT

Expansion Tank Sizing based on BTU's

Boiler	Type of Radiation			
Net Output in 1000's of BTU/Hr	Finned Tube Baseboard or Radiant Panel	Convectors or Unit Heaters	Radiators Cast Iron	Baseboard Cast Iron
MBH	Use Model	Use Model	Use Model	Use Model
25	TK300-15	TK300-15	TK300-15	TK300-15
50	TK300-15	TK300-15	TK300-30	TK300-30
75	TK300-30	TK300-30	TK300-30	TK300-60
100	TK300-30	TK300-30	TK300-60	TK300-60
125	TK300-30	TK300-60	TK300-60	TK300-90
150	TK300-30	TK300-60	TK300-90	TK300-90
175	TK300-60	TK300-60	XPS-030V	XPS-030V
200	TK300-60	TK300-60	XPS-030V	XPS-030V
250	TK300-60	TK300-90	XPS-030V	XPS-040V
300	TK300-90	XPS-030V	XPS-030V	XPS-040V
350	XPS-030V	XPS-030V	XPS-040V	XPS-060V
400	XPS-030V	XPS-040V	XPS-040V	XPS-060V

TAXV Series Expansion Tanks—Commercial Usage

TAX Series (commercial) Expansion Tanks are designed to absorb hot water expansion in closed heating systems of large installations. TAX tanks are equipped with butyl diaphragms to separate the air from the system water (glycol).

- ASME construction: Horizontal TAX Series tanks.

Maximum Safe Operating Pressure (psi): 125 psi
Maximum Safe Operating Pressure (kPa): 862 kPa
Precharge (psi): 12 psi
Materials: Steel shell; Heavy duty Butyl diaphragm
Operating Temperature Range: 240°F Maximum (115°C Maximum)
Comments: ASME Construction

Material Number	Connection Size (in.)	Diameter	Height	Volume	Weight	Maximum Acceptance Volume
TAXV-015/U	1/2 in.	12 in. (304.8 mm)	22 in. (558.8 mm)	8.6 gal (32.6 L)	24 lb (10.9 kg)	3.2 gal (12.1 L)
TAXV-020/U	1/2 in.	15 in. (381.0 mm)	25 in. (635.0 mm)	16.5 gal (62.5 L)	46 lb (20.9 kg)	11.3 gal (42.8 L)
TAXV-040/U	1/2 in.	15 in. (381.0 mm)	33 in. (838.2 mm)	23 gal (87.1 L)	66 lb (29.9 kg)	11.3 gal (42.8 L)
TAXV-060/U	1/2 in.	16 in. (406.0 mm)	45 in. (1143.0 mm)	33.6 gal (127.3 L)	98 lb (44.5 kg)	11.3 gal (42.8 L)
TAXV-080/U	1 in.	24 in. (609.6 mm)	29 in. (736.6 mm)	44.4 gal (168.3 L)	155 lb (70.3 kg)	22.6 gal (85.6 L)
TAXV-100/U	1 in.	24 in. (609.6 mm)	34 in. (863.6 mm)	55.7 gal (211 L)	176 lb (79.8 kg)	22.6 gal (85.6 L)
TAXV-120/U	1 in.	24 in. (609.6 mm)	47 in. (1193.8 mm)	68 gal (257.7 L)	214 lb (97.1 kg)	34 gal (128.9 L)
TAXV-144/U	1 in.	24 in. (609.6 mm)	52 in. (1320.8 mm)	77.0 gal (291.8 L)	230 lb (104.3 kg)	34 gal (128.9 L)
TAXV-180/U	1 in.	24 in. (609.6 mm)	60 in. (1524.0 mm)	90 gal (341.1 L)	271 lb (122.9 kg)	34 gal (128.9 L)
TAXV-200/U	1 in.	24 in. (609.6 mm)	66 in. (1676.4 mm)	110 gal (416.9 L)	290 lb (131.5 kg)	34 gal (128.9 L)
TAXV-240/U	1 in.	30 in. (762 mm)	58 in. (1473.2 mm)	132.0 gal (500.3 L)	401 lb (181.9 kg)	46 gal (174.3 L)
TAXV-260/U	1-1/4 in.	30 in. (762 mm)	65 in. (1651.0 mm)	158.0 gal (500.3 L)	460 lb (208.7 kg)	56 gal (174.3 L)
TAXV-280/U	1-1/4 in.	30 in. (762 mm)	82 in. (2082.8 mm)	211.0 gal (500.3 L)	590 lb (267.6 kg)	84 gal (174.3 L)

XPS Series Expansion Tanks

XPS Series Expansion Tanks absorb hot water expansion in closed heating systems in larger installations. They have butyl diaphragms to separate clamped design, keep fluids circulating and maintain minimum system pressure.

- For ASME construction consult factory.

Connection Type: Female NPT
Maximum Safe Operating Pressure (psi): 100 psi
Maximum Safe Operating Pressure (kPa): 689 kPA
Materials: Steel shell; Heavy duty Butyl diaphragm
Operating Temperature Range: 240°F Maximum (115°C Maximum)
Comments: Heating

Material Number	Connection Size (in.)	Diameter	Height	Volume	Weight	Maximum Acceptance Volume
XPS-030V/U	1 in.	15 in. (381 mm)	24 in. (610 mm)	14.0 gal (53.1 L)	25 lb (11.4 kg)	11.3 gal (42.8 L)
XPS-040V/U	1 in.	15 in. (381 mm)	32 in. (813 mm)	20.0 gal (75.8 L)	33 lb (15 kg)	11.3 gal (42.8 L)
XPS-060V/U	1 in.	15 in. (381 mm)	48 in. (1219 mm)	32 gal (121.3 L)	43 lb (19.5 kg)	11.3 gal (42.8 L)
XPS-090V/U	1 1/4 in.	22 in. (559 mm)	36 in. (914 mm)	44 gal (166.8 L)	69 lb (31.4 kg)	34 gal (128.9 L)
XPS-110V/U	1 1/4 in.	22 in. (559 mm)	47 in. (1194 mm)	62 gal (235 L)	92 lb (41.8 kg)	34 gal (128.9 L)
XPS-160V/U	1 1/4 in.	26 in. (660 mm)	47 in. (1194 mm)	86.0 gal (325.9 L)	123 lb (55.9 kg)	46 gal (174.3 L)

V135 Thermostatic Mixing or Diverting Valves

Application: Thermostatic mixing/diverting valve for use in hydronic heating systems. Controls loop temperature in radiant heating systems.
Capacity: Standard
Temperature Range: 248°F Maximum (120°C Maximum)
Collar Diameter: 1 3/16 in. (30 mm)
Materials (Body): Bronze
Pressure Ratings (psi): Steam – 232 psi maximum
Pressure Ratings (kPa): Steam – 1601 kPa
Maximum Differential Pressure Ratings (Close-off) (psi): 17 psi maximum

Replacement Gaskets:
901444 1/2" - 3/4"
901445 1"
901446 1-1/4"

Thermostatic Mixing or Diverting Valves for use in hydronic heating systems as a three-way mixing or diverting valve; controls loop temperature in radiant heating systems.

- Includes plastic handle for manual operation.
- Knurled ring on T100R control head for easy attachment to V135.

Material Number	Approximate, Dimensions	Pipe Size (inch)	Pipe Size (DN)	Body Pattern	Capacity (Cv)	Connection Type	Used With
V135A1006	2 9/16 in. x 5 1/8 in. (64 mm x 128 mm)	3/4 in.	DN20	Three-way	3.7 Cv	Sweat	T100R
V135A1014	2 15/16 in. x 5 13/16 in. (74 mm x 148 mm)	1 in.	DN25	Three-way	5.8 Cv	Sweat	T100R
V135A1063	3 3/8 in. x 6 3/8 in. (86 mm x 162 mm)	1 1/4 in.	DN32	Three-way	5.8 Cv	Sweat	T100R

T100R Thermostatic Mixing or Diverting Valve Actuator

For use in hydronic heating systems with V135 Valves in a three-way mixing or diverting application. Controls loop temperature in radiant heating systems.

- T100R Thermostatic Actuator includes strap-on-pipe sensor.
- Knurled ring on T100R control head for easy attachment to V135.

Collar Diameter: 1 3/16 in. (30 mm)
Used With: V135

Material Number	Application	Capillary Length	Temperature Range	Sensor (Integral or Remote)	Setpoint (Integral or Remote)
T100R1004	Thermostatic Radiator Controller for use with V135 valve body for diverting or mixing applications.	6 ft. 8 in. (2 m)	50°F to 122°F (10°C to 50°C)	Remote	Remote
T100R1012	Thermostatic Radiator Controller for use with V135 valve body for diverting or mixing applications.	6 ft. 8 in. (2 m)	86°F to 158°F (30°C to 70°C)	Remote	Remote

Thermostatic Radiator Valves and Actuator Cartridges and Tools

Material Number	Description	Works With
CA100A116	VALVE INSERT	Old style V100
CA100B1008	VALVE INSERT USA	V100, V2040, V2000 series
CA110C107	VALVE INSERT	V110D, E, F
VA8200A001	Cartridge Change Tool	V2042, V2043, V200, V2040, V100
MT110C1011	Cartridge Change Tool	V110D, E, F,

V110 High Capacity Thermostatic Radiator Valves

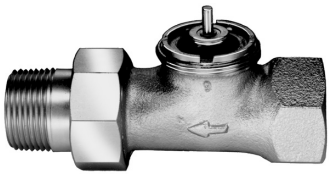

V110D

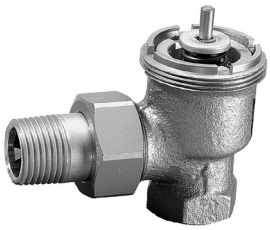

V110E

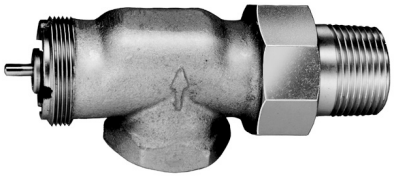

V110F

High Capacity Thermostatic Radiator Valves with T104 Actuators provide control of temperature by modulating the flow of hot water or steam through free-standing radiators, convectors and other heating units with high capacity requirements.

- Designed with the higher capacity normally required by North American heating systems.
- Valve seat disc, which is made of resilient material (EPDM), ensures tight shutoff on steam or hot water systems.
- Nickel-plated bronze casted body with working parts in cartridge insert for ease of service.
- All working parts are replaceable using service tool (MT110C1011) while valve remains in service, in-line, under pressure.
- Valves normally open without control mounted.
- Valves may be used with T104 Thermostatic Actuators.
- Meet ASHRAE Standard 102-1989.
- Replacement cartridge is CA110C107 for all

Capacity: high
Temperature Range: 248°F Maximum (120°C Maximum)
Used With: T104
Pressure Ratings (psi): Hot Water – 150 psi maximum; Steam – 15 psi maximum
Pressure Ratings (kPa): Hot Water – 1034 kPa maximum; Steam – 103 kPa
Maximum Differential Pressure Ratings (Close-off) (psi): 17 psi maximum

Material Number	Application	Pipe Size (inch)	Pipe Size (DN)	Body Pattern	Capacity (Cv)	Capacity (Btu / hr - steam)	Connection Type	Materials (Body)	Cartridge Change Tool
V110D1000/U	Precise and automatic control of room temperature in two-pipe systems by modulating the flow of hot water or steam through high capacity heating units.	1/2 in.	DN15	Straight	4.6 Cv	127,000 Btu/hr	Threaded	Nickel Plated Bronze	Yes - Use MT110C1011
V110D1008/U		3/4 in.	DN20	Straight	5.8 Cv	162,000 Btu/hr	Threaded	Nickel Plated Bronze	Yes - Use MT110C1011
V110D1016/U		1 in.	DN25	Straight	7.0 Cv	193,000 Btu/hr	Threaded	Nickel Plated Bronze	Yes - Use MT110C1011
V110D1024/U		1 1/4 in.	DN32	Straight	8 Cv	193,000 Btu/hr	Threaded	Bronze	Yes - Use MT110C1011
V110E1004/U	Precise and automatic control of room temperature in two-pipe systems by modulating the flow of hot water or steam through high capacity heating units when used with T104 Thermostatic Actuators	1/2 in.	DN15	Angle	4.6 Cv	127,000 Btu/hr	Threaded	Nickel Plated Bronze	
V110E1012/U		3/4 in.	DN20	Angle	5.8 Cv	162,000 Btu/hr	Threaded	Nickel Plated Bronze	
V110E1020/U		1 in.	DN25	Angle	7.0 Cv	193,000 Btu/hr	Threaded	Nickel Plated Bronze	
V110E1028/U		1 1/4 in.	DN32	Angle	8 Cv	193,000 Btu/hr	Threaded	Bronze	
V110F1002/U		1/2 in.	DN15	Horizontal Angle	4.6 Cv	127,000 Btu/hr	Threaded	Nickel Plated Bronze	
V110F1010/U		3/4 in.	DN20	Horizontal Angle	5.8 Cv	162,000 Btu/hr	Threaded	Nickel Plated Bronze	
V110F1018/U		1 in.	DN25	Horizontal Angle	7.0 Cv	193,000 Btu/hr	Threaded	Nickel Plated Bronze	

Dimensions in inches (millimeters)

V110D (Straight Body)

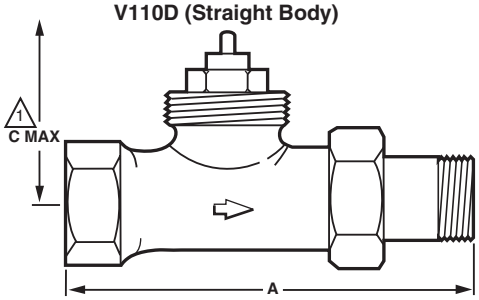

PIPE SIZE	A IN. (MM)	1 C MAX IN. (MM)
1/2 INCH	3-3/4 (95)	4-3/4 (121)
3/4 INCH	4-1/8 (105)	4-3/4 (121)
1 INCH	4-15/16 (125)	4-3/4 (121)
1-1/4 INCH	5-7/8 (149)	5 (127)

1 C MAX DIMENSION IS WITH T104 CONTROL INSTALLED. M18959A

Dimensions in inches (millimeters)

V110E (Angle Body)

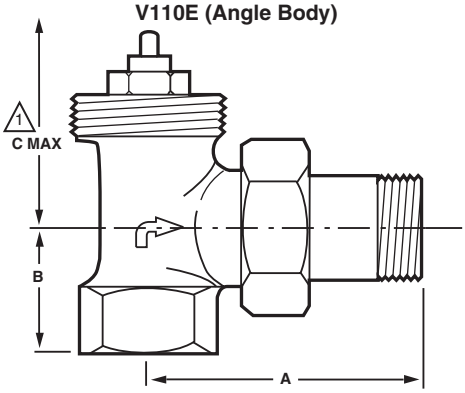

PIPE SIZE	A IN. (MM)	B IN. (MM)	1 C MAX IN. (MM)
1/2 INCH	2-9/16 (65)	1 (25)	4-3/4 (121)
3/4 INCH	2-5/8 (67)	1-1/8 (29)	4-3/4 (121)
1 INCH	3 (76)	1-5/16 (33)	4-3/4 (121)
1-1/4 INCH	3-5/8 (90)	1-11/16 (43)	5 (127)

1 C MAX DIMENSION IS WITH T104 CONTROL INSTALLED. M18960A

Dimensions in inches (millimeters)

V110F (Horizontal Angle Body)

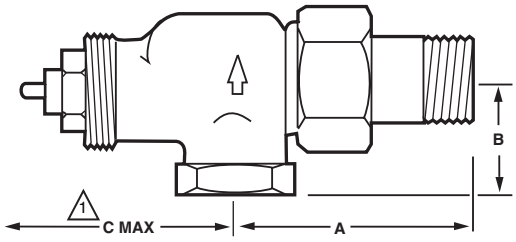

PIPE SIZE	A IN. (MM)	B IN. (MM)	1 C MAX IN. (MM)
1/2 INCH	2-1/4 (57)	1 (25)	5-1/8 (130)
3/4 INCH	2-9/16 (65)	1-1/8 (29)	5-1/4 (133)
1 INCH	2-15/16 (74)	1-3/16 (30)	5-1/4 (133)
1-1/4 INCH	3-1/2 (89)	2-3/16 (56)	5-1/4 (133)

1 C MAX DIMENSION IS WITH T104 CONTROL INSTALLED. M18961A

Typical Installation

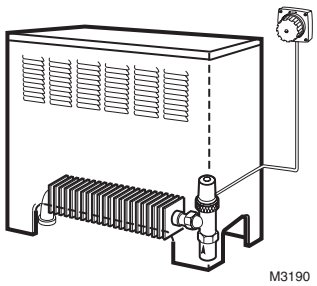

Typical Installations

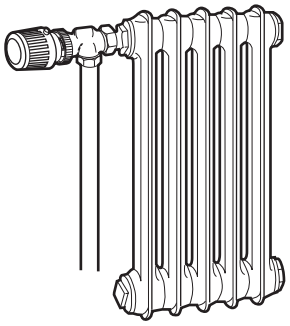

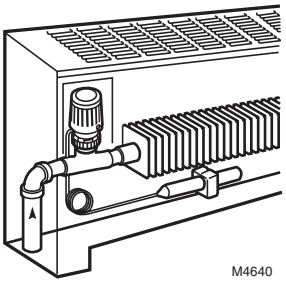

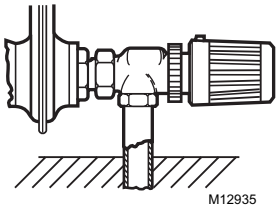

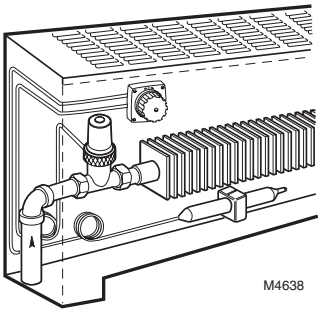

T104 High Capacity Thermostatic Radiator Valve Actuators

T104A

T104B

T104C

T104F

T104V

Provide precise and automatic control of room temperature in two-pipe systems by modulating the flow of hot water or steam through free-standing radiators, convectors and other heating units with high capacity requirements.

- Continually monitor and adjust room temperature for consistent comfort and relief from under-heating and overheating.
- Designed with the higher capacity normally required by North American heating systems.
- Valve seat disc, which is made of resilient material (EPDM), ensures tight shutoff on steam or hot water systems.
- Nickel-plated bronze casted body with working parts in cartridge insert for ease of service.
- Controls include sensor, setpoint dial and valve actuator; components may be integral or connected by capillary tubes.
- Require no electrical connections.
- Meet ASHRAE Standard 102-1989.
- 40 mm collar diameter.

Collar Diameter: 1 19/32 in. (40 mm)
Used With: V110

Material Number	Application	Capillary Length	Temperature Range	Sensor (Integral or Remote)	Setpoint (Integral or Remote)	Comments
T104A1040	Self-contained controller with sensor, setpoint dial and valve actuator in one unit. Adjustable limits. Mount horizontal. Not for use inside enclosures or in locations with restricted airflow around sensor. For V110 valves.		43°F to 79°F (6°C to 26°C)	Integral	Integral	Adjustable Limits
T104B1038	Controller with combined remote setpoint and sensor mounted on a wall. Setpoint/sensor connect with a capillary tube to an actuator, which mounts on the valve body. For V110 valves.	6 ft. 8 in. (2 m)	48°F to 79°F (9°C to 26°C)	Remote	Remote	
T104B1046		16 ft (4.9 m)	48°F to 79°F (9°C to 26°C)	Remote	Remote	
T104C1036	Controller with remote setpoint and sensor normally mounted with setpoint dial mounted on outside cabinet or enclosure; sensor mounted beneath heating coils in cold air return. Double capillaries. For V110 valves.	Two 4 1/2 ft (Two 1.4 m)	48°F to 79°F (9°C to 26°C)	Remote	Remote	
T104F1512	Thermostatic radiator valve controller for use with V110 series valves. With remote temperature sensing and integral setpoint. Adjustable limits.	6 ft. 8 in. (2 m)	43°F to 79°F (6°C to 26°C)	Remote	Integral	Adjustable Limits

Dimensions in inches (millimeters)

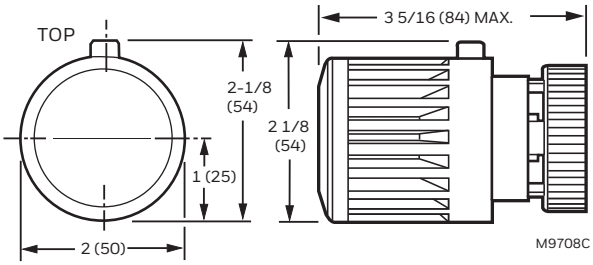

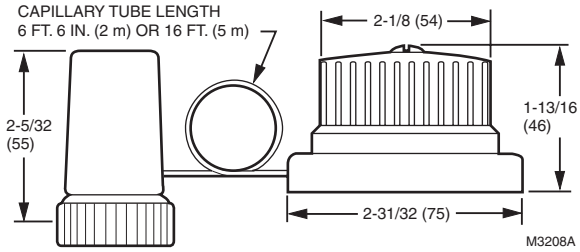

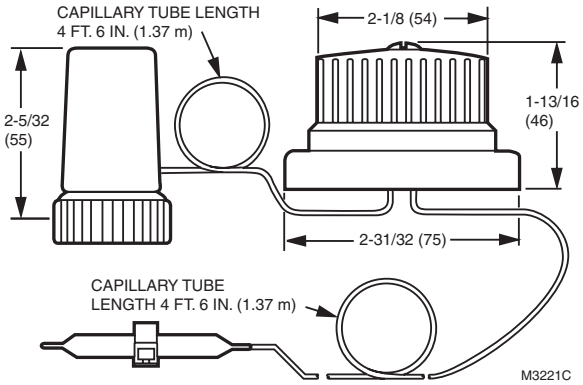

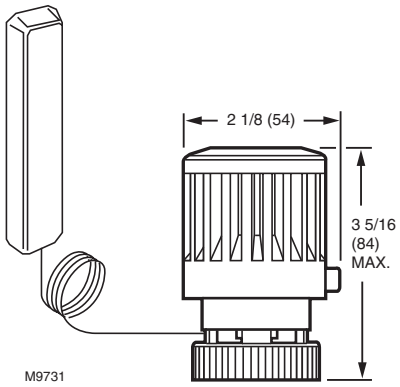

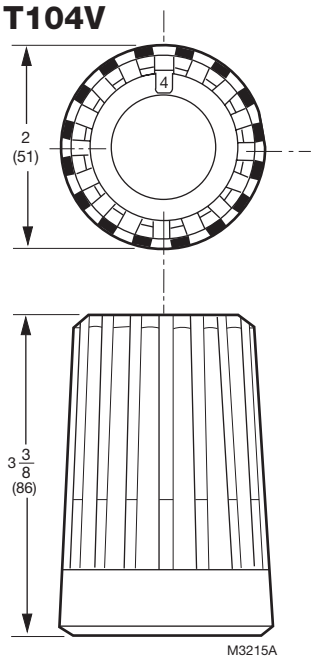

V2000 Series Valve Bodies Cross Reference to V100 Series

Use T100 Actuators With New V2000 Series Valve Bodies

V2000 Series (Current)	V100 Series (Obsolete)	Product Description
V2040DSL15	V100D1056	1/2 in. TRV Straight Body, Female NPT Inlet, Male NPT Tail-piece Outlet
V2040DSL20	V100D1064	3/4 in. TRV Straight Body, Female NPT Inlet, Male NPT Tail-piece Outlet
V2040DSL25	V100D1072	1 in. TRV Straight Body, Female NPT Inlet, Male NPT Tail-piece Outlet
V2040ESL15	V100E1055	1/2 in. TRV Vertical Body, Female NPT Inlet, Male NPT Tail-piece Outlet
V2040ESL20	V100E1063	3/4 in. TRV Vertical Body, Female NPT Inlet, Male NPT Tail-piece Outlet
V2040ESL25	V100E1071	1 in. TRV Vertical Body, Female NPT Inlet, Male NPT Tail-piece Outlet
V2040ASL15	V100F1054	1/2 in. TRV Horizontal, Female NPT Inlet, Male NPT Tail-piece Outlet
V2040ASL20	V100F1062	3/4 in. TRV Horizontal, Female NPT Inlet, Male NPT Tail-piece Outlet
V2040ASL25	V100F1070	1 in. TRV Horizontal, Female NPT Inlet, Male NPT Tail-piece Outlet
V2042HSL10	V100P1046	1/8 in. TRV (1/2 in. Body With 1/8 in. Adapter) Male NPT Inlet, Female NPT Outlet. One Pipe Steam
V2043HSL10	Y100P1001	1/8 in. TRV (1/2 in. Body With 1/8 in. Adapter) Male NPT Inlet, Female NPT Outlet. One Pipe Steam Includes SA123A1003
VS1200SL01		Replacement Cartridge New V2000 Series

V200; V2000 Series Standard Capacity Thermostatic Radiator Valves Body

V200LD

V2040D

V2040A, V2040E
(Straight body)

V2040E
(Angle body)

One-Pipe Steam Thermostatic Radiator Valves - Allow automatic temperature control in one-pipe steam or hot water systems for free standing radiators, convectors and other heating units with standard capacity requirements.

- Continually monitors and adjusts room temperature for consistent comfort and relief from under-heating and overheating.
- Adjustable balancing cartridge design made from resilient material (EPDM), ensures tight shut-off on steam and hot water systems.
- Nickel plated brass casted body.
- Replaceable cartridge for easy service with service tool.
- Controls include valve body, steam air vent.
- Used with T100 set point and capillary actuators.
- No electrical connection required for non-electric actuators.
- Normally open without control mounted.

Capacity: Standard
Temperature Range: 248°F Maximum (120°C Maximum)
Materials (Body): Nickel Plated Bronze
Cartridge Change Tool: Yes - Use VA8200A001
Pressure Ratings (psi): Hot Water – 150 psi maximum; Steam – 15 psi maximum
Pressure Ratings (kPa): Hot Water – 1034 kPa maximum; Steam – 103 kPa
Maximum Differential Pressure Ratings (Close-off) (psi): With T100 or T200: 15 psi, With MV100: 36 psi, For low noise: 3 psi
Maximum Differential Pressure Ratings (Close-off) (kPa): With T100 or T200: 103 kPa, With MV100: 248 kPa, For low noise: 20 kPa

Material Number	Application	Pipe Size (inch)	Pipe Size (DN)	Body Pattern	Capacity (Cv)	Capacity (Btu / hr - steam)	Connection Type	Connection Size	Used With
V200LDSL15	For baseboards and other installations with copper tubing.	1/2 in.	DN15	Straight	2.5 Cv	59,100 Btu/hr	Inlet – NPT; Outlet – Sweat both ends, no union	1/2 in.	T100
V200LDSL20		3/4 in.	DN20	Straight	2.7 Cv	63,800 Btu/hr	Inlet – NPT; Outlet – Sweat both ends, no union	3/4 in.	T100
V2040ASL15	Replaces most manual valves with minimum piping changes.	1/2 in.	DN15	Horizontal Angle	2.5 Cv	59,100 Btu/hr	Inlet – NPT; Outlet – Threaded	1/2 in.	T100A, M and V controls to conform to horizontal mounting requirements
V2040ASL20		3/4 in.	DN20	Horizontal Angle	2.7 Cv	63,800 Btu/hr	Inlet – NPT; Outlet – Threaded	3/4 in.	T100A, M and V controls to conform to horizontal mounting requirements
V2040ASL25		1 in.	DN25	Horizontal Angle	2.7 Cv	70,500 Btu/hr	Inlet – NPT; Outlet – Threaded	1 in.	T100A, M and V controls to conform to horizontal mounting requirements
V2040DSL15	Especially suited for baseboards and straight runs where manual valves were not originally installed.	1/2 in.	DN15	Straight	2.5 Cv	59,100 Btu/hr	Inlet – NPT; Outlet – Threaded	1/2 in.	
V2040DSL20		3/4 in.	DN20	Straight	2.7 Cv	63,800 Btu/hr	Inlet – NPT; Outlet – Threaded	3/4 in.	
V2040DSL25		1 in.	DN25	Straight	2.7 Cv	70,500 Btu/hr	Inlet – NPT; Outlet – Threaded	1 in.	
V2040ESL15	Use where installation space is limited	1/2 in.	DN15	Angle	2.5 Cv	59,100 Btu/hr	Inlet – NPT; Outlet – Threaded	1/2 in.	T100C, T100B, T100F
V2040ESL20		3/4 in.	DN20	Angle	2.7 Cv	63,800 Btu/hr	Inlet – NPT; Outlet – Threaded	3/4 in.	T100C, T100B, T100F
V2040ESL25		1 in.	DN25	Angle	2.7 Cv	70,500 Btu/hr	Inlet – NPT; Outlet – Threaded	1 in.	T100C, T100B, T100F

Dimensions in inches (millimeters)

V200LD (Straight Body)

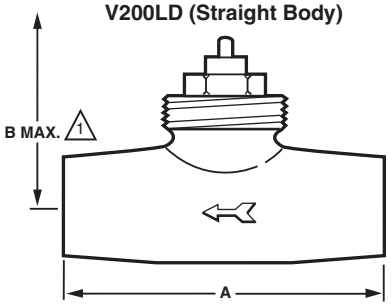

PIPE SIZE	A IN. (MM)	1 B MAX IN. (MM)
1/2 INCH	2-5/8 (66)	4-1/16 (104)
3/4 INCH	2-15/16 (74)	4-1/16 (104)

1 B MAX DIMENSION IS WITH T100A CONTROL INSTALLED.

M12933C

V2040D (Straight Body)

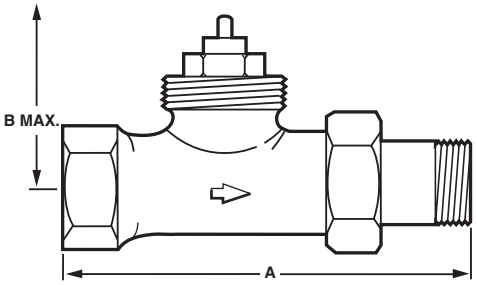

PIPE SIZE	A IN. (MM)	1 B MAX IN. (MM)
1/2 INCH	3-3/4 (95)	4-1/6 (104)
3/4 INCH	4-3/16 (106)	4-1/6 (104)
1 INCH	4-1/2 (114)	4-1/2 (114)

1 B MAX DIMENSION IS WITH T100A CONTROL INSTALLED.

M12930D

V2040A (Horizontal Angle Body)

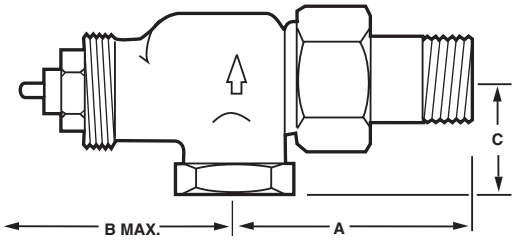

PIPE SIZE	A IN. (MM)	1 B MAX IN. (MM)	C IN. (MM)
1/2 INCH	2-1/8 (54)	4-1/2 (115)	1-1/8 (29)
3/4 INCH	2-1/2 (64)	5-3/16 (132)	1-3/16 (31)
1 INCH	2-15/16 (74)	5-3/16 (132)	1-7/16 (37)

1 B MAX DIMENSION IS WITH T100A CONTROL INSTALLED.

M12932C

V2040E (Angle Body)

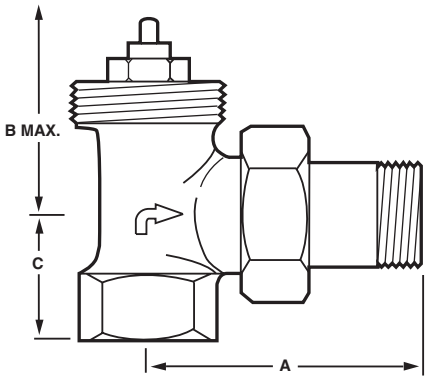

PIPE SIZE	A IN. (MM)	1 B MAX IN. (MM)	C IN. (MM)
1/2 INCH	2-5/16 (58)	3-13/16 (97)	1 (25)
3/4 INCH	2-5/8 (66)	3-13/16 (97)	1-1/8 (29)
1 INCH	2-15/16 (74)	4-5/16 (110)	1-5/16 (34)

1 B MAX DIMENSION IS WITH T100A CONTROL INSTALLED.

M12931D

Typical Installation

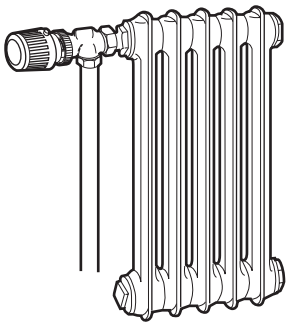

M4632

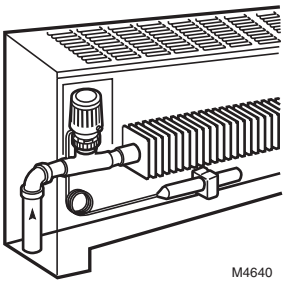

M4640

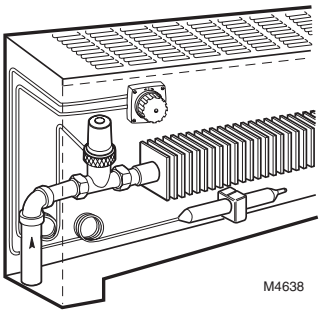

M4638

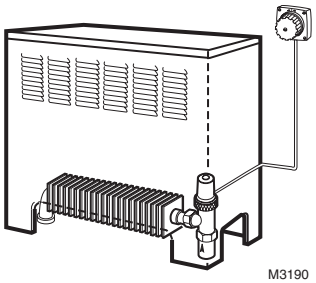

M3190

HR90 TheraPro Electronic Radiator Controller

The TheraPro HR90 is an electronic radiator controller with a modern design and provides features for convenience and energy saving. It is used as stand-alone controller for radiator heating control applications. For optimized readability of the backlight display the display position can be adjusted as well. The display is switched on as soon as a button is pressed or the wheel is rotated. Fast installation due to the simple lock mechanism closing the device at the radiator valve. Up to 3 pre-set standard time programs are selectable. After the installation the HR90 operates immediately to the factory set program.

- With the auto-window function, the radiator valve is closed when ventilating the room.
- In ECO mode, the room temperature is lowered by 6°F.
- Optimized control of the room temperature by start/stop the radiator controller calculates when to open or closing the valve in order to achieve the desired room temperature at the set time.
- Works with V2040 valves and Danfoss RA valve.

Application: For use on radiators
Controlled Fluid: Water
Temperature Range (F): 32°F to 122°F
Temperature Range (C): 0°C to 50°C
Scale Markings: Screen
Approximate, Dimensions (in.): 2.4 x 2.1 x 3.8
Approximate, Dimensions (mm): 60 x 54 x 96

Connection Type: M30x1.5
Materials (Body): Polycarbonate
Sensor Range: 40°F to 86°F (5°C to 30°C)
Electrical Ratings: 2 batteries 1,5V: LR6, AA, AM3, Lithium, or 2 rechargeable batteries 1,2V NiMH
Comments: IP30 Protection Class

Material Number	Description	Includes
HR90	The TheraPro HR90 is an electronic radiator controller with a modern design and provides features for convenience and energy saving.	Controller, Base plate, Display holder, Batteries, Screws, Adapter(s)

T3019 Thera-6

Thermostatic radiator heads are self-actuating controllers which regulate the flow of hot water through thermostatic radiator valves to continuously control the room temperature to the set-point selected on the head.

- Premium quality, liquid-filled, German-made sensor with high setting force and minimum hysteresis
- Closed handle preventing dust accumulation
- Handle made of non-yellowing ASA plastic for permanent good appearance
- Internal structural ring from high-strength plastic for long durability
- Highest-class Control Accuracy per amended EN215
- TELL "I -class" energy efficiency certified according to TELL labeling scheme
- Compact size to fit most installations even with limited space available
- Modern, stylish, easy to clean design
- Easy to operate with ergonomic torque to turn the head to desired setting
- Temperature range limitation by accessory range locks Frost protection setting
- A high-stroke variant enabling higher 2K p-band flows and proportional regulation with small p-band
- Standard M30 x 1.5 connection to the valve body according to EN 215
- Variants with connection for Danfoss RA and Macon/MMA valves
- Variants with remote sensor on a 6.6 ft (2 m) capillary.

Connection Type: Standard: M30 x 1.5 thread; Danfoss: Snap connection RA valves; Macon: M28 x 1.5 thread (MMA)
Max. operating water temperature: 104 °F (40 °C) (including when thermostat is set to 0)
Closing force: 20 lbf (90 N)

Material Number	Connection	Sensor	Setpoint Range	Application	Replaces Model
T3019W0NA	M30 x 1.5 0	Integral	34- 82 °F (1-28 °C)	Compatible with all MNG, Braukmann, Honeywell and Honeywell Home thermostatic valves with M30x1,5 connection produced by Resideo and its predecessors since 1974	T1002W0NA
T301920W0	M30 x 1.5 0	Remote			T100F1395
T3019DAW0NA	Danfoss RA	Integral			T2040NA
T3019MMAW0	M28 x 1.5 Macon/MMA	Integral			N/A

T100 Standard Capacity Thermostatic Radiator Actuators

T100B

T100C

T100F

Allow automatic temperature control in two-pipe steam or hot water systems for free standing radiators, convectors, and other heating units with standard capacity requirements. Provide comfort and energy savings at affordable prices.

- Continually monitor and adjust room temperature for consistent comfort and relief from under-heating and overheating.
- Valve seat disc, which is made of resilient material (EPDM), ensures tight shutoff on steam or hot water systems.
- Nickel-plated brass casted body with working parts in cartridge insert for ease of service.
- Controls include sensor, setpoint dial and valve actuator; components may be integral or connected by capillary tubes.
- Require no electrical connections.
- All working parts are replaceable using service tool (MT100C1016) while valve remains in service, in-line, under pressure.
- Valves normally open without control mounted.
- Valves may also be used with MV100 Electric Zone Valve Actuator.

Collar Diameter: 1 3/16 in. (30 mm)
Used With: V100, V2000

Material Number	Application	Capillary Length	Temperature Range	Sensor (Integral or Remote)	Setpoint (Integral or Remote)	Replaces	Comments
T100B1035	A control with combined remote setpoint and sensor mounted on wall. Connected by a capillary tube to an actuator, which is mounted on the valve body.	6 1/2 ft (2 m)	48°F to 79°F (9°C to 26°C)	Remote	Remote	American Steam - 02-300-00. Taco - 5206. Danfoss RA2000 - 013G8262. Ammark - 76. TM Macon - TML B42000. NT Macon - NTL B45000. in combination with V2000	
T100B1043	A control with combined remote setpoint and sensor mounted on wall. Connected by a capillary tube to an actuator, which is mounted on the valve body.	16 ft (5 m)	48°F to 79°F (9°C to 26°C)	Remote	Remote	Taco - 5207. Danfoss RA2000 - 013G8265. Ammark - 76L. (in combination with V2000)	
T100C1026	A control with remote setpoint and sensor mounted with setpoint dial on outside of heating cabinet; sensor mounted beneath heating coils in cold air return. Dual capillary.	Two 4 1/2 ft (Two 1.4 m)	48°F to 79°F (9°C to 26°C)	Remote	Remote	American Steam - 02-320-00. Taco - 5211. Danfoss RA2000 - 013G8233. Ammark - 74. TM Macon - TMLZ B52000. NT Macon - NTL B55000. (in combination with V2000)	

Dimensions in inches (millimeters)

T100B

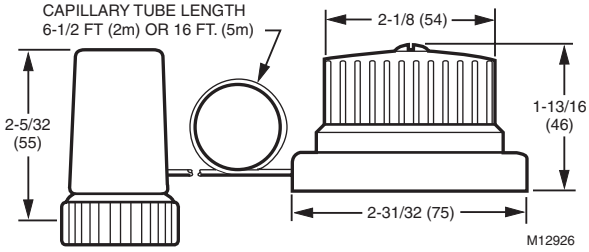

T100F

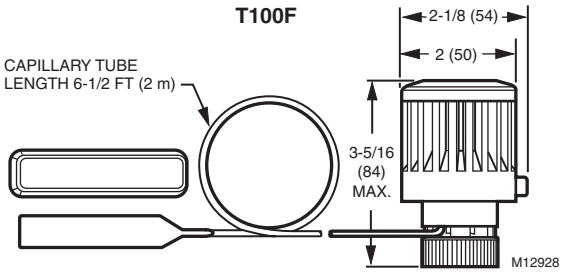

T100C

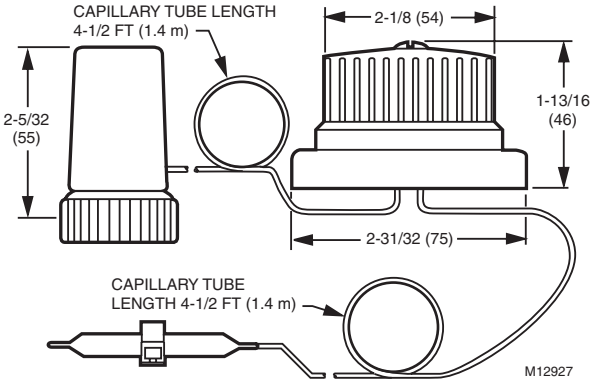

T1002W

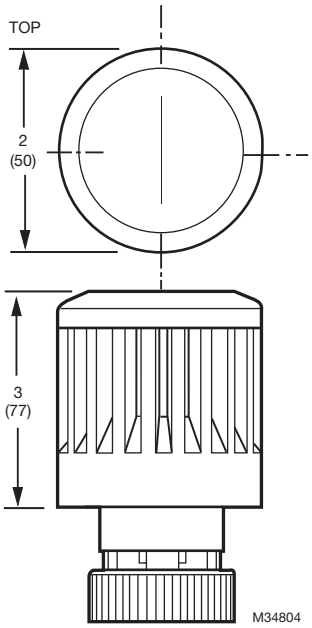

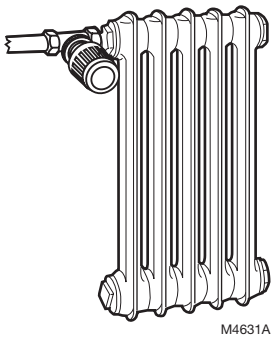

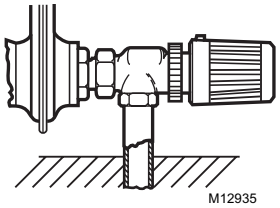

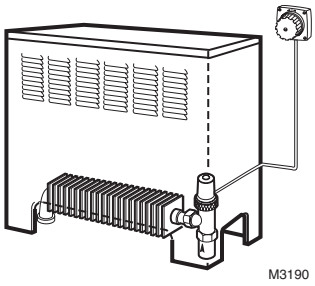

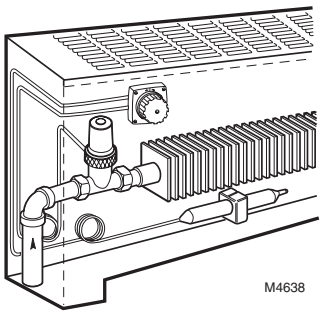

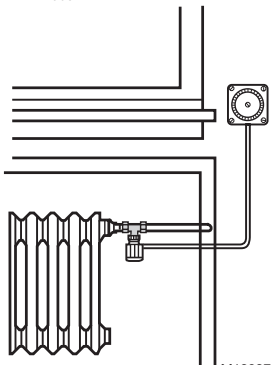

V2042H; V2043H One-pipe Steam Thermostatic Radiator Valve

One-Pipe Steam Thermostatic Radiator Valves - Allow automatic temperature control in one-pipe steam or hot water systems for free standing radiators, convectors and other heating units with standard capacity requirements.

- Continually monitors and adjusts room temperature for consistent comfort and relief from under-heating and overheating.
- Adjustable balancing cartridge design made from resilient material (EPDM), ensures tight shut-off on steam and hot water systems.
- Nickel plated brass casted body.
- Replaceable cartridge for easy service with service tool.
- Controls include valve body, steam air vent.
- Used with T100 set point and capillary actuators.
- No electrical connection required for non-electric actuators.
- Normally open without control mounted.

Application: Use for one pipe steam applications.
Pipe Size (inch): 1/8 in.
Body Pattern: Angle
Capacity: Standard
Temperature Range: 248°F Maximum (120°C Maximum)
Connection Type: Inlet – NPT; Outlet – Threaded
Connection Size (in.): 1/8 in.

Materials (Body): Nickel Plated Bronze
Cartridge Change Tool: Yes - Use VA8200A001
Used With: T100
Maximum Differential Pressure Ratings (Close-off) (psi): With T100 or T200: 15 psi, With MV100: 36 psi, For low noise: 3 psi
Maximum Differential Pressure Ratings (Close-off) (kPa): With T100 or T200: 103 kPa, With MV100: 248 kPa, For low noise: 20 kPa

Material Number	Pressure Ratings (psi)	Pressure Ratings (kPa)	Includes
V2042HSL10	Steam – 15 psi maximum	Steam – 103 kPa maximum	
V2043HSL10	Steam – Valve: 15 psi maximum; Vent: 6 psi maximum	Steam – Valve: 103 kPa maximum; Vent: 41 kPa maximum	V2042HSL10 plus steam/air vent

Dimensions in inches (millimeters)

V2042H (Body)/V2043H (Body with Vent)

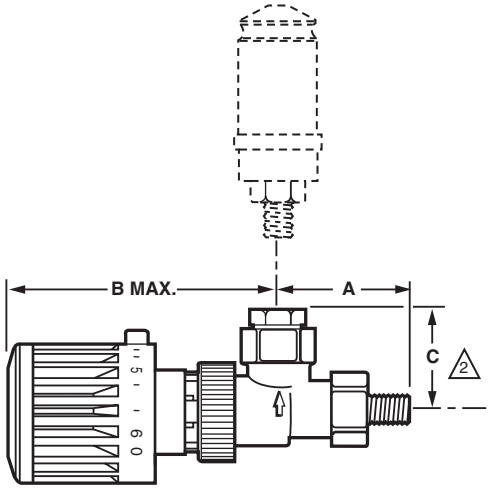

PIPE SIZE	A IN. (MM)	1 B MAX IN. (MM)	2 C IN. (MM)
3/8 INCH	1-11/16 (43)	3-13/16 (97)	1-3/16 (31)

1 B MAX DIMENSION IS WITH T100A CONTROL INSTALLED.

2 C DIMENSION IS WITHOUT THE STEAM/AIR VENT INSTALLED.

M17016B

Typical Installation

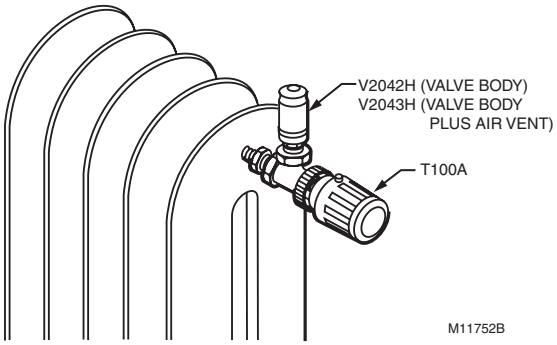

M11752B

Typical Installation

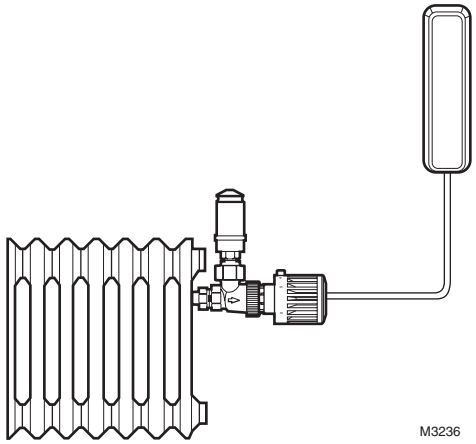

M3236

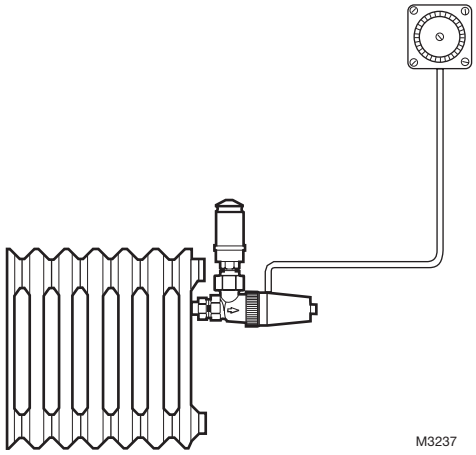

M3237

resideo

PRODUCTS BUSINESSES WARRANTY POLICY

Resideo warrants the products in this catalog (except those parts designated on Resideo's price lists as not covered by this warranty) to be free from defects due to workmanship or materials, under normal use and service, for the following warranty periods.

Eighty-four (84) months from date of installation
- TK300 Series expansion tanks with date codes 1901 or later, TX-5 and TX-12 tanks with date codes 1901 or later.

Sixty (60) months from date of installation (Trade thermostats only)
- Prestige® IAQ, WiFi 9000, VisionPRO® models, all round models, T1 models, T4 models, T6 models, T10 models, M5 models, FocusPRO® models, PRO 4000, PRO 3000, LineVoltPRO™
- Air Cleaners, Humidifiers, Ventilators, Ultraviolet Treatment, Indoor Air Quality, and Zoning products, excluding replacement maintenance parts
- AquaPUMP Circulator Pumps - Fixed and Variable Speed
- HP Hydronic Panels
- C7189R RedLINK Wireless Indoor Air Sensor
- R7284U1004
- Smart Home security products & C1 + C2 cameras
- Magnetic Hydraulic Separators

Thirty-six (36) months from date of installation (Trade thermostats only)
- AUBE branded thermostats, timers, and switches, Econnect
- Glowfly Q3200
- 5000 Series Zone Valves

Twenty-four (24) months from date of installation
- PRO 2000 and PRO 1000 thermostats
- Other indoor air quality and zoning products with a date code of 0452 or earlier, unless otherwise specified
- AQ2000 Aquatrol panels and AQ1000 thermostats
- RedLINK Entry/Exit Remote
- RedLINK Vent Boost Remote
- Q4100
- R8184 and R8182

Twelve (12) months from date of installation
- Water Solutions products
- RedLINK Wireless Outdoor Air Sensor
- RedLINK Portable Comfort Control
- RedLINK Internet Gateway

The warranty period for all other products is twelve (12) months from date of installation.

If a product is defective due to workmanship or materials, is removed within the applicable warranty period, and is returned to Resideo in accordance with the procedure described below, Resideo will, at its option, either repair, replace or credit the customer for the purchase price of the product, in accordance with the procedure described below. This warranty extends only to persons or organizations who purchase products in this catalog for resale.

The expressed warranty above constitutes the entire warranty of Resideo with respect to the products in this catalog and IS IN LIEU OF ALL OTHER WARRANTIES, EXPRESS OR IMPLIED, INCLUDING ANY WARRANTY OF MERCHANTABILITY OR WARRANTY OF FITNESS FOR A PARTICULAR PURPOSE. IN NO EVENT SHALL RESIDEO BE RESPONSIBLE FOR ANY CONSEQUENTIAL DAMAGES OF ANY NATURE WHATSOEVER.

INSTRUCTIONS—INSTALLING OR SERVICING CONTRACTOR OR DEALER

When replacing a product under warranty, including those products furnished on original heating and/or cooling equipment, you should rely on your local Resideo Wholesaler or Distributor for prompt and efficient product replacement service.

No warranty claim for product replacement or credit will be honored by Resideo without a completed return authorization form or a manual return authorization form issued by Resideo Customer Care.

INSTRUCTIONS—WHOLESALER OR DISTRIBUTOR

The following will apply to the return of any product to Resideo under this warranty, and are:

(i) identified with a Return Authorization Form (obtained from the B2B website at Customer.Resideo.com);
(ii) display the Return Authorization Form number and return address label on the outside of the return carton. Make sure a copy of the form is enclosed in the return carton;
(iii) packed separately from other returns and protected from shipping damage;
(iv) have certification by the installer or servicing dealer that the product was removed, due to failure, within the applicable warranty period;
(v) are received transportation pre-paid at the facility listed on the shipping and/or packing slip;
(vi) and are found by Resideo's inspection to be defective in workmanship or materials under normal use and service will be handled in accordance with one of the two following procedures, as specified by the customer making the return.

1. *CREDIT PROCEDURE.* Resideo will issue credit, at Resideo's lowest wholesaler net price in effect at the time of the return (as set forth on Resideo's then current price sheet) or at the actual invoice amount if a copy of that invoice is attached to the packing list. (Replacement Exchange Products will be at Resideo's lowest replacement exchange net price in effect at the time of such return, as shown on Resideo's then current price sheet.) Resideo reserves the right to disallow this credit option in cases of warranty abuse.
2. *REPLACEMENT PROCEDURE.* Warranty replacement procedure must be used for in-warranty emergency replacement orders. Customer will not be credited for items not meeting warranty criteria as outlined by policy. Please return the defective item to the address listed on the return authorization form.

The warranty will not be honored if:
(i) product is damaged or missing parts or accessory items including batteries.
(ii) product exhibits evidence of field misapplications.

Final disposition of any warranty claim will be determined solely by Resideo. If inspection by Resideo does not disclose any defect covered by the warranty, the product will be returned or scrapped as instructed by the customer and Resideo's regular service charges will apply. Products returned to the customer may be sent shipping charges collect.

If you have any questions relative to product returns to Resideo, contact your Customer Care Representative:

Resideo Technologies, Inc. and its Affiliates
Customer Care MN10-131A
1985 Douglas Drive
Golden Valley, MN 55422
1-888-793-8193

Our Product Brands

Resideo | Honeywell Home | Resideo Braukmann

For more information
resideo.com/pro/water

Resideo Technologies, Inc.
Scottsdale, AZ 85254

Office: 800.633.3991

For more information
resideo.com

63-8702 | Rev 01 | 11/24
© 2024 Resideo Technologies, Inc.