3-speed technology

– The power of flexibility

One of the main features of a SuperBrute is its 3-speed motor. This unique motor advancement, pioneered by Grundfos more than 30 years ago, allows you the ability to adjust the pump speed to fit your specific application. Flexibility to choose your speed gives you the peace of mind that you have the correct pump for the job. The versatility of the SuperBrute not only reduces the number of circulators you have in your truck, but also reduces your installation time and callbacks.

Features

- Lower inventory – increased profitability
- Easy to install – easy to service
- Reliable starts – trouble-free performance
- Quiet - wet rotor technology
- Industry leading three-year warranty

Cast Iron
SuperBrute
UPS 15-58FC

Stainless Steel
SuperBrute
UPS 15-55SUC/TLC

Stainless Steel
SuperBruteXL
UPS 43-100SF

– Building on success

Due to the popularity of the UPS15-58 SuperBrute, we designed six new models to expand the 3-speed circulator range. For most hydronic heating applications, the UPS15-58 is the only circulator you will ever need. But, since some situations require unique demands, additional models were designed to expand the SuperBrute range. All the pumps contain the same features that made the original SuperBrute such a sought-after alternative. Flexibility, ease of installation, and reduced inventory are the benefits that make the SuperBrute team the new standard in circulators.

High Head SuperBrutes	UPS 15-58 F/FC
	UPS 26-99 FC/BFC
	UPS 26-150 F/SF
High Flow SuperBrutes	UPS 43-44 FC/BFC
	UPS 43-100 F/SF
	UPS 50-60 F/SF
Additional Stainless Options	UPS 15-35 SFC/SUC/TLC
	UPS 15-55 SFC/SUC

– The SuperBrute team

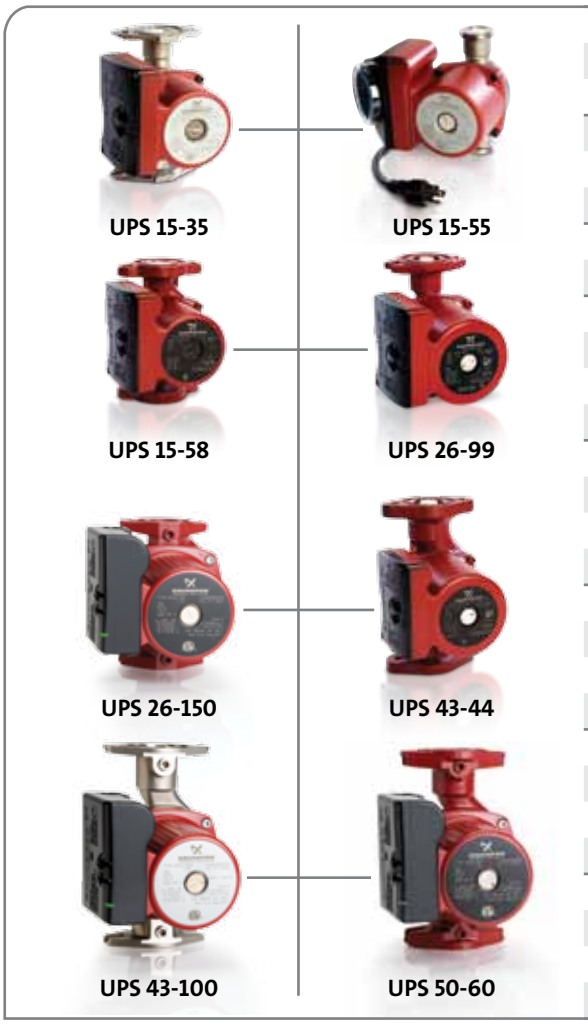

Model	Volts	Material	Part Number
UPS 15-35 SFC	115V	Stainless	59896772
UPS 15-35 SUC	115V	Stainless	59896778
UPS 15-35 SUC/TLC	115V	Stainless	59896780
UPS 15-55 SFC	115V	Stainless	59896773
UPS 15-55 SUC	115V	Stainless	59896781
UPS 15-55 SUC/TLC	115V	Stainless	59896783
UPS 15-58 FC	115V	Cast Iron	59896341
UPS 15-58 FRC	115V	Cast Iron	59896343
UPS 26-99 FC	115V	Cast Iron	52722512
UPS 26-99 FC	230V	Cast Iron	52722513
UPS 26-99 BFC	115V	Bronze	52722518
UPS 26-99 BFC	230V	Bronze	52722519
UPS 26-150 F	115V	Cast Iron	95906630
UPS 26-150 F	230V	Cast Iron	95906631
UPS 26-150 SF	115V	Stainless	95906632
UPS 26-150 SF	230V	Stainless	95906633
UPS 43-44 FC	115V	Cast Iron	52722514
UPS 43-44 FC	230V	Cast Iron	52722515
UPS 43-44 BFC	115V	Bronze	52722520
UPS 43-44 BFC	230V	Bronze	52722521
UPS 43-100 F	115V	Cast Iron	95906636
UPS 43-100 F	230V	Cast Iron	95906637
UPS 43-100 SF	115V	Stainless	95906638
UPS 43-100 SF	230V	Stainless	95906639
UPS 50-60 F	115V	Cast Iron	97523134
UPS 50-60 F	230V	Cast Iron	97523135
UPS 50-60 SF	115V	Stainless	97523136
UPS 50-60 SF	230V	Stainless	97523137

– SuperBrute features

Model Type	Max Fluid Temperature				Min. Fluid Temperature	Max. System Pressure 145 PSI	Check Valve	Timer and Line Cord	Connection Type			
	150°F (66°C)	165°F (74°C)	195°F (90°C)	230°F (110°C)	36°F (2°C)				GF 15/26	GU 125	GF 40/43	GF 50
UPS15-35SFC		•			•	•	•		•			
UPS15-35SUC		•			•	•	•			•		
UPS15-35SUC/TLC	•				•	•	•	•		•		
UPS15-55SFC				•	•	•	•		•			
UPS15-55SUC				•	•	•	•			•		
UPS15-55SUC/TLC	•				•	•	•	•		•		
UPS15-58FC				•	•	•	•		•			
UPS15-58FRC				•	•	•	•		•			
UPS26-99FC/BFC				•	•	•	•		•			
UPS26-150F/SF			•		•	•			•			
UPS43-44FC/BFC				•	•	•	•				•	
UPS43-100F/SF			•		•	•					•	
UPS50-60F/SF			•		•	•						•

– SuperBrute dimensions

Model Type	A	B	C	D	E	F
UPS15-35SFC	6 8/16	5 8/16	4 2/16	3 14/16	2 15/16	3 2/16
UPS15-35SUC	5 14/16	5 1/16	4 2/16	3 7/16	2 15/16	-
UPS15-35SUC/TLC	5 14/16	5 1/16	4 2/16	3 7/16	2 15/16	-
UPS15-55SFC	6 8/16	5 8/16	4 2/16	3 14/16	2 15/16	3 2/16
UPS15-55SUC	5 14/16	5 1/16	4 2/16	3 7/16	2 15/16	-
UPS15-55SUC/TLC	5 14/16	5 1/16	4 2/16	3 7/16	2 15/16	-
UPS15-58FC	6 1/2	5 1/4	4	4 3/16	3	3 5/32
UPS15-58FRC	6 1/2	5 1/4	4	4 3/16	3	3 5/32
UPS26-99FC/BFC	6 1/2	6	4 7/8	3 1/2	3 7/16	3 5/32
UPS26-150F/SF	6 1/2	7 1/8	5 7/8	3 7/8	3 3/4	3 1/8
UPS43-44FC/BFC	8 1/2	6 11/16	5 1/8	4 3/4	3 3/16	3 7/16
UPS43-100F/SF	8 1/2	7 3/8	5 7/8	4 1/2	3 3/4	3 1/8
UPS 50-60 F/SF	8 1/2	8 5/8	6 1/4	4 3/4	3 3/4	2 7/8

Union: SUC, SUC/TLC

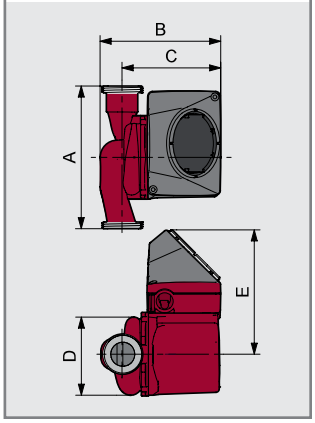

Flange: F, SF, FC, BFC

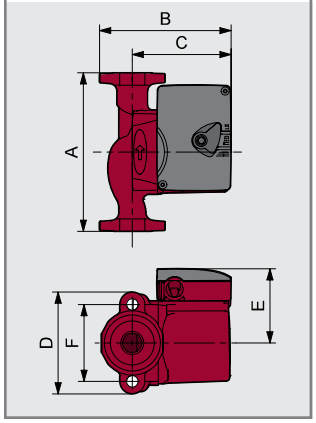

Rotated Flange: FRC

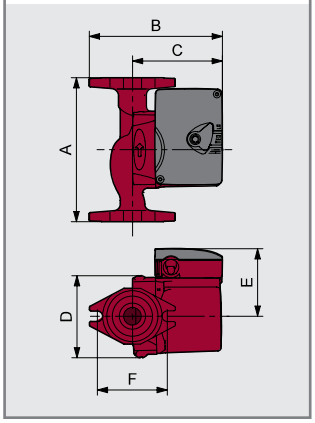

UPS 50-60

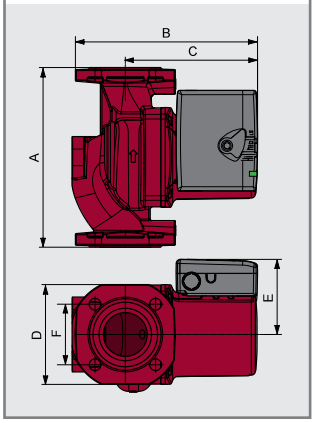

– SuperBrute 3-speed performance curves – 60 Hz

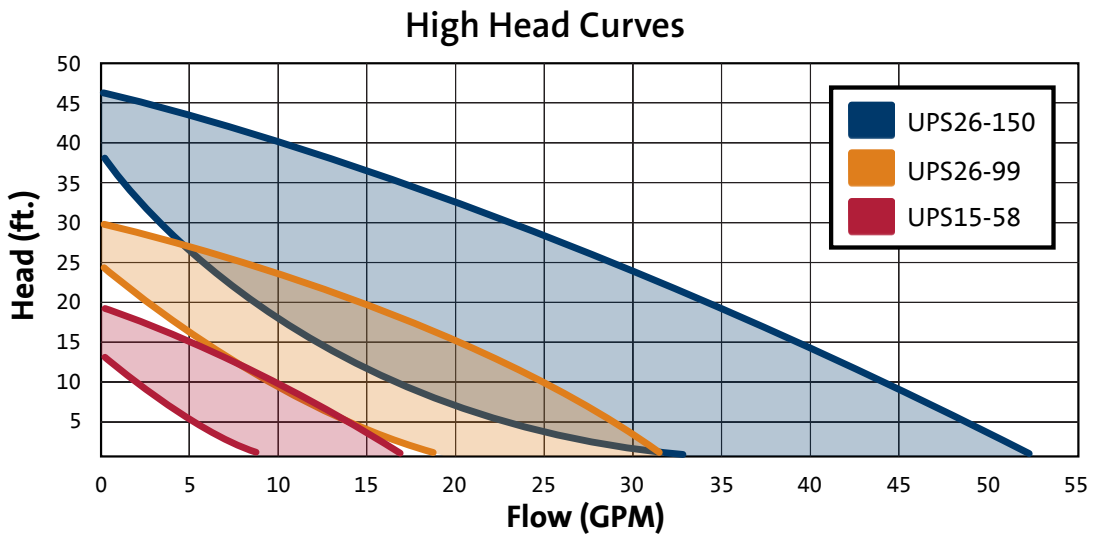

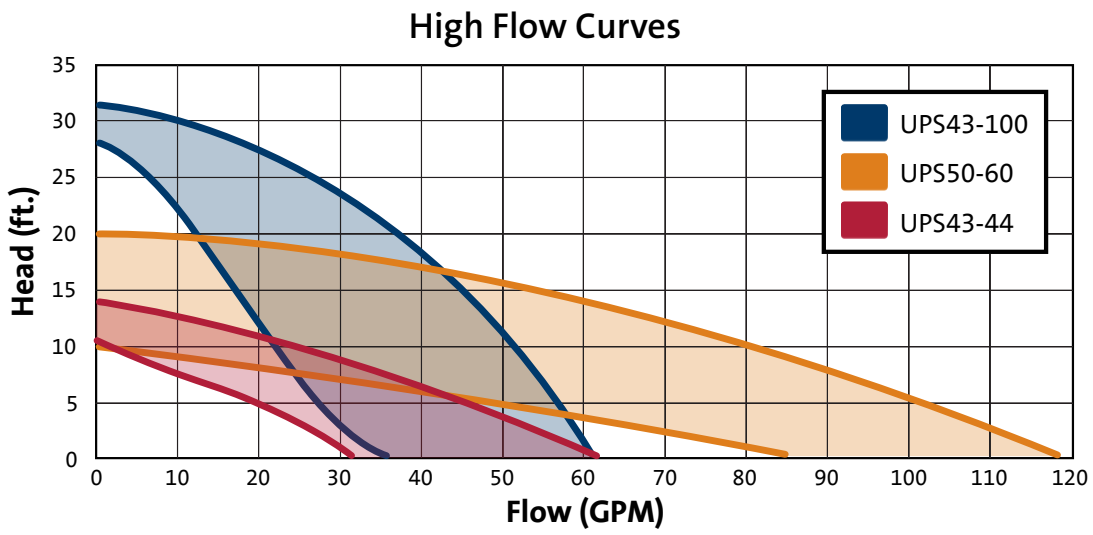

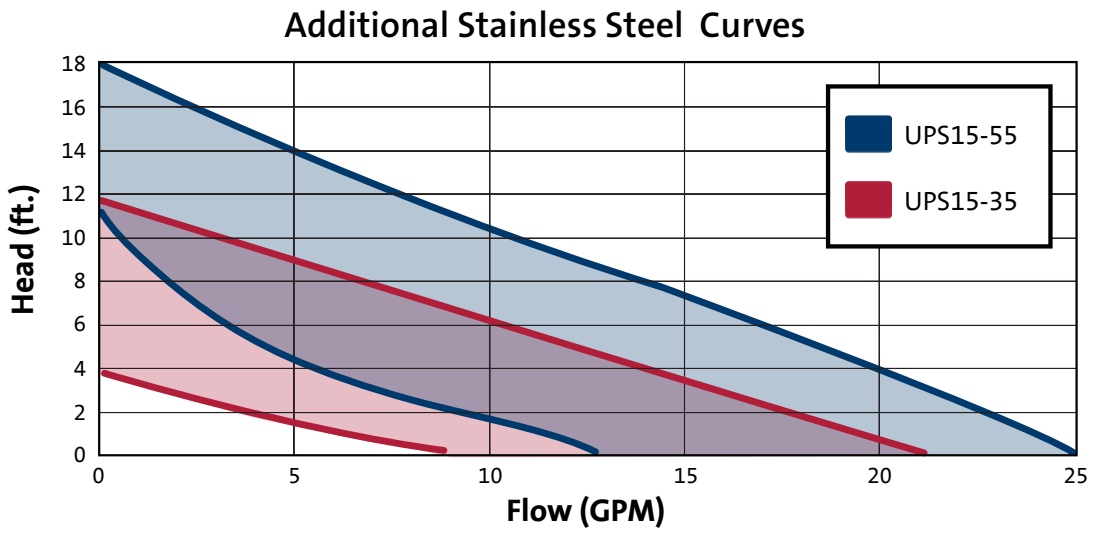

CUT ALONG THIS LINE

BE > THINK > INNOVATE >

Being responsible is our foundation
Thinking ahead makes it possible
Innovation is the essence

GRUNDFOS **SUPERBRUTE**

Lower inventory for increased profitability

- 8 hydraulic models replace 130 competitor pumps
- SuperBrutes offer a 3-speed switch for extreme flexibility
- Fast installation time for a higher profit margin

- Nut capture feature (except UPS 15-58)

- Green LED Power indicator light (UPS 43-100, UPS 26-150, and UPS 50-60 models only)

Easy installation

- Quick connect terminals for easy installation

Reliable starts

- Patented electronic starting unit provides the highest starting torque of any circulators in its class (UPS15-58 only)
- Ceramic bearings ensure years of quiet, trouble-free operation

- Removable check valve eliminates need for an in-line flow check (UPS 15-35, 55, 58, UPS 26-99, UPS 43-44 models only)

L-UP-SL-027 7/10 (US)

U.S.A.
GRUNDFOS Pumps Corporation
17100 West 118th Terrace
Olathe, Kansas 66061
Phone: (913) 227-3400
Telefax: (913) 227-3500

Canada
GRUNDFOS Canada Inc.
2941 Brighton Road
Oakville, Ontario
L6H 6C9
Phone: (905) 829-9533
Telefax: (905) 829-9512

Mexico
Bombas GRUNDFOS de Mexico S.A. de C.V.
Boulevard TLC No. 15
Parque Industrial Stiva Aeropuerto
C.P. 66600 Apodaca, N.L. Mexico
Phone: 011-52-81-8144 4000
Telefax: 011-52-81-8144 4010

www.grundfos.com

GRUNDFOS®

– SuperBrute competitive cross-reference

MODEL	SPEED	TACO	Bell & Gossett	Armstrong
UPS15-58 FC/FRC	HIGH	005F, 007F, 008F, 0010F-IFC, 00R-MSF1-IFC	NRF-22, LR-20WR	Astro 30, Astro 50-3
	MED	005F-(IFC), 007F-(IFC), 008F-(IFC), 0010F-IFC, 00R-IFC, 00R-MSF1-IFC	NRF9F/LW	Astro 25, Astro30-3
	LOW	005F-(IFC), 006F-(IFC), 00R-MSF1-IFC	–	Astro 20
UPS26-99 FC/BFC	HIGH	0013(B)-IFC	NRF-36 Sp-2, NRF-45 Sp-2	E7(B)
	MED	0011(F, B)-(IFC), 0014(F, B)-(IFC)	Series 100, PL-30, PR, NRF-36 Sp-1, NRF-45 Sp-1	Astro 50(B), H41
	LOW	–	LR-15BWR	Astro 30(B)
UPS26-150 F/SF	HIGH	1400-45(B)	PL-55(B)	–
	MED	0011(F, B, SF), 0013(F, B, SF), 1400-20(F,B)	PL-36(B)	E8(B), E9(B)
	LOW	–	NRF-36 Sp-2 & 3, NBF-36 Sp-2 & 3	E7(B)
UPS43-44 FC/BFC	HIGH	–	HV	–
	MED	–	NRF-33	H32
	LOW	0010-MSF1-IFC	–	–
UPS43-100 F/SF	HIGH	–	–	E17(B)
	MED	1400-20(F, B), 1400-30(F, B), 1400-40(F, B), 1400-45(F, B)	PL-45(B), PL-50(B), NRF-45 Sp-2 & 3, NBF-45 Sp-2 & 3, NRF-36 Sp-2 &3	E11(B), E15(B),E16(B)
	LOW	–	–	E10(B), E13(B)
UPS50-60 F/SF	HIGH	1400-65(F, B)	PL-130(B)	E19(B), E28(B), E29(B)
	MED	1400-60(F, B)	PL-50(B), PL-75(B)	–
	LOW	–	–	E16(B)
UPS15-35 SFC	HIGH	005BF2-(IFC), 007(BF, SF)-(IFC)	NBF(SSF)-12F/LW	Astro 30(B) Sp-2
	MED	–	–	Astro 20(B), Astro 30(B)-3 Sp-1 & 2
	LOW	–	–	
UPS15-35 SUC	HIGH	–	NBF(SSF)-12U/LW	Astro 25BU
	MED	006BC4-1, 006B7-IFC	NBF-9U/LW	Astro 25BU
	LOW	003-B4-2-IFC	–	–
UPS15-35 SUC/TLC	HIGH	–	–	Astro 25U-T
	MED	–	–	Astro 25U-T
	LOW	–	–	
UPS15-55 SFC	HIGH	–	–	Astro 30(B)
	MED	005-BF, 006-BF, 007-(BF, SF), 008-(BF, SF)-(IFC), 00R-SF-IFC	NBF-22, SSF-22	Astro 30(B) Sp-2, Astro 30(B)-3 Sp-1
	LOW	–	–	Astro 30(B) Sp-1, Astro 50(B) Sp-1
UPS15-55 SUC	HIGH	–	–	–
	MED	–	NBF-22U, SSF-22U	–
	LOW	–	–	–